MDX-U1/U1RDS

SERVICE MANUAL

US Model
Canadian Model
E Model
MDX-U1
AEP Model
MDX-U1RDS

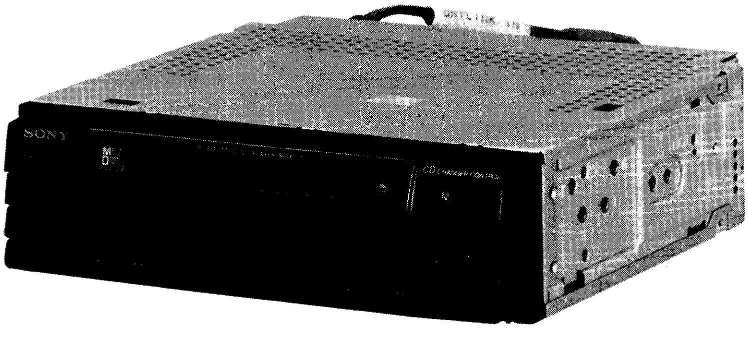

Photo: US, Canadian, E Model

Model Name Using Similar Mechanism	NEW

SPECIFICATIONS

MiniDisc section

Signal-to-noise ratio	90 dB
Frequency response	20 – 20,000 Hz
Wow and flutter	Below measurable limit
Laser Diode Properties	
Material	GaAlAs
Wavelength	780 nm
Emission duration	Continuous
Laser output power	Less than 44.6 µW*

*This output is the value measured at a distance of 200 mm from the objective lens surface on the Optical Pick-up Block.

Tuner section

FM

Tuning range	US, Canadian, E: 87.9 – 107.9 MHz AEP: 87.5 – 108.0 MHz
Antenna terminal	External antenna connector
Intermediate frequency	10.7 MHz
Usable sensitivity	12 dBf (75 ohms)
Selectivity	75 dB at 400 kHz
Signal-to-noise ratio	65 dB (stereo), 70 dB (mono)
Harmonic distortion at 1 kHz	0.5% (stereo), 0.3% (mono)
Separation	30 dB at 1 kHz
Frequency response	30 – 15,000 Hz
Capture ratio	2 dB

AM

Tuning range	US, Canadian: 530 – 1,710 kHz E: 530 – 1,620 kHz (at 10 kHz step) 531 – 1,602 kHz (at 9 kHz step) AM tuning interval 9 kHz/10 kHz switchable AEP: MW: 531 – 1,602 kHz LW: 153 – 281 kHz
Antenna terminal	External antenna connector
Intermediate frequency	450 kHz
Sensitivity	35 µV 50 µV (LW)

General

Output lead	Power antenna relay control lead Power amplifier control lead
Tone controls	Bass ± 10 dB at 100 Hz Treble ± 10 dB at 10 kHz
Power requirements	12 V DC car battery (negative ground)
Dimensions	Approx. 178 × 50 × 170 mm (w/h/d), (7 1/8 × 2 × 6 3/4 inches) not incl. projecting parts and controls
Mounting dimensions	Approx. 178 × 50 × 153 mm (7 1/8 × 2 × 6 1/8 inches) (w/h/d), not incl. projecting parts and controls
Mass	Approx. 1.3 kg (2 lb 14 oz.)
Accessories supplied	Remote commander (1) Mounting hardware (1 set) Size AA (R6) battery (2) Power connecting cord (1) Front panel case (1) Optical cable adaptor (1)

FM/AM MINIDISC PLAYER
MDX-U1

FM/MW/LW MINIDISC PLAYER
MDX-U1RDS

SONY®

Features

General

- Switchable **two color illumination (amber and green).**
- **Telephone-mute function** for decreasing the volume automatically with a telephone call.
- **Detachable-front panel** enables you to take the front panel away with you when you leave your car.
- **Caution alarm** will be activated if you turn off the ignition key without removing the front panel from the unit.
- **Digital calendar clock** with the month, date and time display.
- LCD with dot elements for a clear display.
- **DIGITAL IN jack** for connecting CD changer(s) equipped with digital outputs which is(are) compatible with the Sony UNILINK system.

MiniDisc Player Section

- **Title Function*** for displaying the disc and track titles while playing a MiniDisc.
- **4 Mbit Shock Resistant Memory** for preventing sound skipping.
- 1 bit DAC (Digital- to-Analog Converter) for a clear sound reproduction.
- **Shuffle play function** for playing tracks in random order.
- **Repeat play function** for playing a track or a MiniDisc repeatedly.
- **Intro scan function** for playing the first 10 seconds of each track.

* Only with the MiniDiscs whose titles are prerecorded. Some premastered MiniDiscs may not have been electronically labeled, therefore such MiniDiscs cannot have the titles displayed.

Tuner section

- Provided with a **FM diversity reception system** for a better radio reception.
- Up to 24 stations can be preset, 18 stations on FM and 6 stations on AM.
- **BTM (Best Tuning Memory) function** automatically selects and stores the stations with strong signals on the preset number buttons in the order of frequency.
- **Station memo function** for displaying the name of each radio station.

CD changer control section

(when the optional Sony CD changers are connected)

- Several CD changers can be connected and controlled by the use of the Sony source selector (not supplied) with the unit.
- CD changer(s) equipped with digital outputs can be connected.
- **Intro scan function** for playing the first 10 seconds of each track on every disc.
- **Repeat play function** for playing a track, a disc or a changer repeatedly.
- **Shuffle play function** for playing tracks in random order.
- **Custom file function** for displaying the title of each disc and setting the PLAY/SKIP mode on each track.

TABLE OF CONTENTS

Section	*Title*	*Page*
	Specifications	1
	Features	2
1.	**GENERAL**	
	Installation	3
	Connections	5
	Location and Function of Controls	6
	Detaching and Attaching the Front Panel	8
	Setting Calendar Clock	8
	Playing a MiniDisc	8
	Locating a Desired Track or Part of a Track	9
	Playing in Other Modes	9
	Searching for the Stations Automatically	9
	Turning in by Adjusting the Frequency	10
	Memorizing the Stations Automatically	10
	Memorizing Only the Desired Stations	11
	Receiving Stations Stored in the Memory	11
	Displaying the Name of Each Station	11
	Editing the Registered Station Names	12
	Listening to the CD Play	12
	Locating a Desired Disc, Track or Part of a Track	13
	Plaing in Other Modes	13
	Displaying the Title of Each Disc	14
	Playing Selected Tracks on a Disc	15
	Editing a Custom File	16
2.	**DIAGRAMS**	
2-1.	IC Port Function Description	17
2-2.	Keyboard Block Diagram	28
2-3.	MD Section Block Diagram	29
2-4.	Main Section Block Diagram	31
2-5.	MD Servo Section Printed Wiring Board	34
2-6.	MD Servo Section Schematic Diagram	39
2-7.	Main Section Schematic Diagram	44
2-8.	Main Section Printed Wiring Boards	49
3.	**EXPLODED VIEWS**	57
4.	**ELECTRICAL PARTS LIST**	62

This section is extracted from MDX-U1 instruction manual.

SECTION 1
GENERAL

Installation

Installation

Precautions

- Choose the mounting location carefully so that the unit will not interfere with the normal driving functions of the driver.
- Avoid installing the unit where it may be subject to high temperatures, such as from direct sunlight or hot air from the heater, or where it would be subject to dust, dirt or excessive vibration.
- Use only the supplied mounting hardware for a safe and secure installation.
- Be sure to detach the front panel before you start installing the unit.
- The unit is equipped with a cooling fan at the back. Make sure that its air vent is not covered when installing.

Mounting angle adjustment
Adjust the mounting angle to less than 20°.

Précautions

- Choisir soigneusement l'emplacement du montage, de manière que l'appareil ne gêne pas les mouvements du conducteur.
- Eviter d'installer l'appareil dans un endroit où il serait soumis à des températures élevées, comme en plein soleil ou à proximité d'une bouche d'air chaud, ou dans un endroit où il serait exposé à de la poussière, de la saleté ou des vibrations violentes.
- Pour garantir un montage sûr, n'utiliser que le matériel fourni.
- Veiller à détacher le panneau avant d'installer l'appareil.
- L'appareil est équipé d'un ventilateur de refroidissement à l'arrière. S'assurer que les fentes d'aération ne sont pas recouvertes au moment de l'installation.

Réglage de l'angle de montage
Ajuster l'inclinaison à un angle inférieur à 20°.

Mounting Example

Installation in the dashboard

Exemple de montage

Encastrement dans le tableau de bord

1

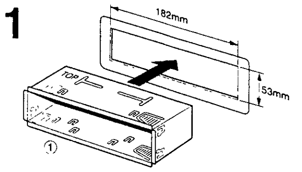

With the TOP marking up
Avec l'inscription TOP vers le haut

2

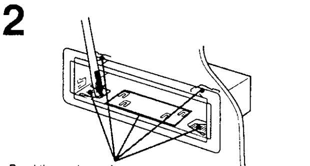

Bend these claws, if necessary.
Si nécessaire, plier ces griffes.

3

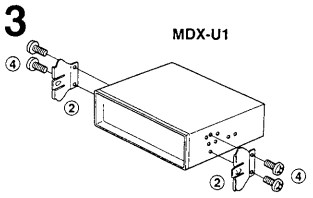

4

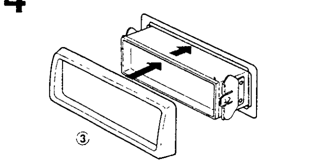

To support the unit

Pour installer l'appareil

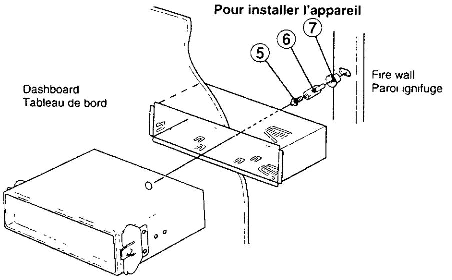

Adaptor for Sony Digital UNILINK System

Use the supplied adaptor ⑧ when connecting a CD changer which is compatible with the Sony digital UNILINK system. Connect the optical cable of the CD changer to the adaptor ⑧, and plug it into the jack on the back of the unit as illustrated.

Adaptateur pour le système numérique UNILINK de Sony

Utiliser l'adaptateur fourni ⑧ pour raccorder un changeur CD compatible avec le système numérique UNILINK de Sony. Raccorder le câble optique du changeur de CD à l'adaptateur ⑧, et brancher celui-ci sur la prise située à l'arrière de l'appareil, comme illustré.

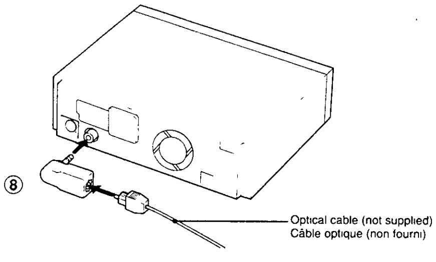

Reset Button

When the installation and connections are over, be sure to press the reset button with a ball-point pen etc. The reset button is located on the left of the connector on the unit side when the front panel is detached.

Touche de réinitialisation

Lorsque l'installation et les connexions sont terminées, ne pas oublier d'actionner la touche de réinitialisation avec un stylo-bille, ou un objet similaire. Cette touche se trouve à gauche du connecteur sur le côté de l'appareil lorsque le panneau avant est détaché.

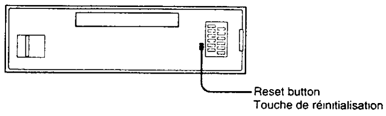

Supplied Mounting Hardware
Matériel de montage fourni

The numbers in the list are keyed to those in the instructions.

Les numéros de la liste correspondent à ceux mentionnés dans les procédures.

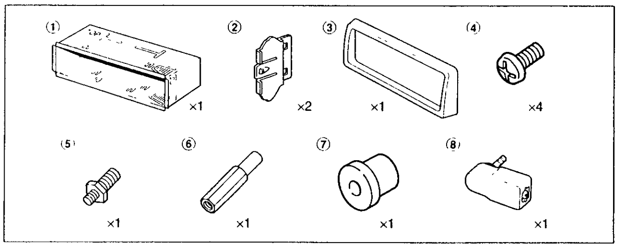

Connections

Connexions

Caution

- This unit is designed for negative ground 12 V DC operation only.
- Before making connections, disconnect the ground terminal of the car battery to avoid short circuits.
- Connect the red power input lead only after all other leads are connected. And be sure to connect it to the positive 12 V power terminal which is energized when the ignition key is set to the accessory position.
- **Run all ground wires to a common ground point.**

Précautions

- Cet appareil est conçu pour fonctionner exclusivement sur courant continu de 12 V avec masse négative.
- Avant de procéder aux connexions, débrancher la borne de mise à la masse de la batterie du véhicule pour éviter tout court-circuit.
- Brancher le fil d'entrée d'alimentation rouge uniquement après que tous les autres fils ont été connectés. En outre, veiller à le raccorder à la borne d'alimentation positive de 12 V qui est alimentée quand la clé de contact est commutée sur la position accessoire.
- **Rassembler tous les fils de mise à la masse en un point de masse commun.**

Switches Requiring the Initial Settings

When the Unit is Used in a Car with No Accessory Position on the Ignition Key — POWER SELECT switch

The illumination on the front panel is factory-set to be turned on even when the unit is not being played. However, this setting may cause some car battery wear if **the unit is used in a car with no accessory position on the ignition key.**
To avoid this battery wear when using the unit in such a car, **set the POWER SELECT switch located at the bottom of the unit to the OFF position, then press the reset button.** The illumination is reset to stay off while the unit is not being played.

Note
The caution alarm for the front panel is not activated when the POWER SELECT switch is set to the OFF position.

When an FM Diversity Antenna is Used — FM DIVERSITY switch

This unit can be connected with diversity antennas. If you use this unit with the diversity antennas, **set the FM DIVERSITY switch located at the bottom of the unit to the ON position to activate the diversity system.**

When you do not use the FM diversity antennas
If you wish to connect a conventional rod antenna, be sure to connect it to the antenna connector of the unit marked "MAIN", and set the FM DIVERSITY switch to the OFF position.
Never connect the antenna to the connector marked "SUB", otherwise if the FM DIVERSITY switch is set to the ON position, the radio signals may not be received properly.

Note
The radio reception will be disturbed by noise if the connection of the antennas was not made properly or the FM DIVERSITY switch was not set correctly.

Interrupteurs nécessitant des réglages initiaux

Quand l'appareil est utilisé dans une voiture dont la clé de contact ne possède pas de position accessoire — Interrupteur POWER SELECT

L'éclairage du panneau avant est réglé en usiné de façon à s'allumer même quand l'appareil ne fonctionne pas. Cependant, ce réglage risque d'épuiser la batterie **si l'appareil est utilisé dans une voiture dont la clé de contact ne possède pas de position accessoire.**
Pour éviter ce désagrément, **commuter l'interrupteur POWER SELECT se trouvant sur le fond de l'appareil sur OFF, puis appuyer sur la touche de réinitialisation.** L'éclairage est réinitialisé pour rester éteint quand l'appareil n'est pas utilisé.

Remarque
Quand l'interrupteur POWER SELECT est commuté sur OFF, l'avertisseur du panneau avant ne fonctionne pas.

Quand une antenne à rayonnement zénithal réduit est utilisée — Interrupteur FM DIVERSITY

Cet appareil accepte le branchement d'antennes à rayonnement zénithal réduit. Pour pouvoir utiliser l'appareil avec ce type d'antenne, **commuter l'interrupteur FM DIVERSITY situé sur le socle de l'appareil sur ON, afin d'activer le système de diversité.**

Quand on n'utilise pas d'antenne à rayonnement zénithal réduit
Pour brancher une antenne conventionnelle, veiller à raccorder celle-ci au connecteur d'antenne de l'appareil, marqué "MAIN" et commuter l'interrupteur FM DIVERSITY sur OFF.
Ne jamais raccorder l'antenne au connecteur marqué "SUB", sinon, si l'interrupteur FM DIVERSITY est commuté sur ON, les signaux radiodiffusés seront mal reçus.

Remarque
La réception radio risque d'être parasitée si le raccordement des antennes a été mal réalisé ou si l'interrupteur FM DIVERSITY n'est pas correctement réglé.

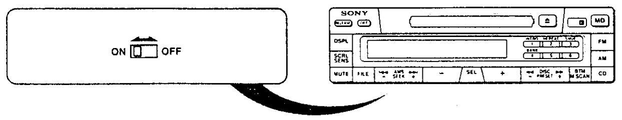

Use a jeweler's screwdriver etc. to change the positions of the switches.

Utiliser un tournevis de joaillier, ou un objet similaire, pour changer la position des interrupteurs.

Connections of Example 1 / Connexions de l'exemple 1

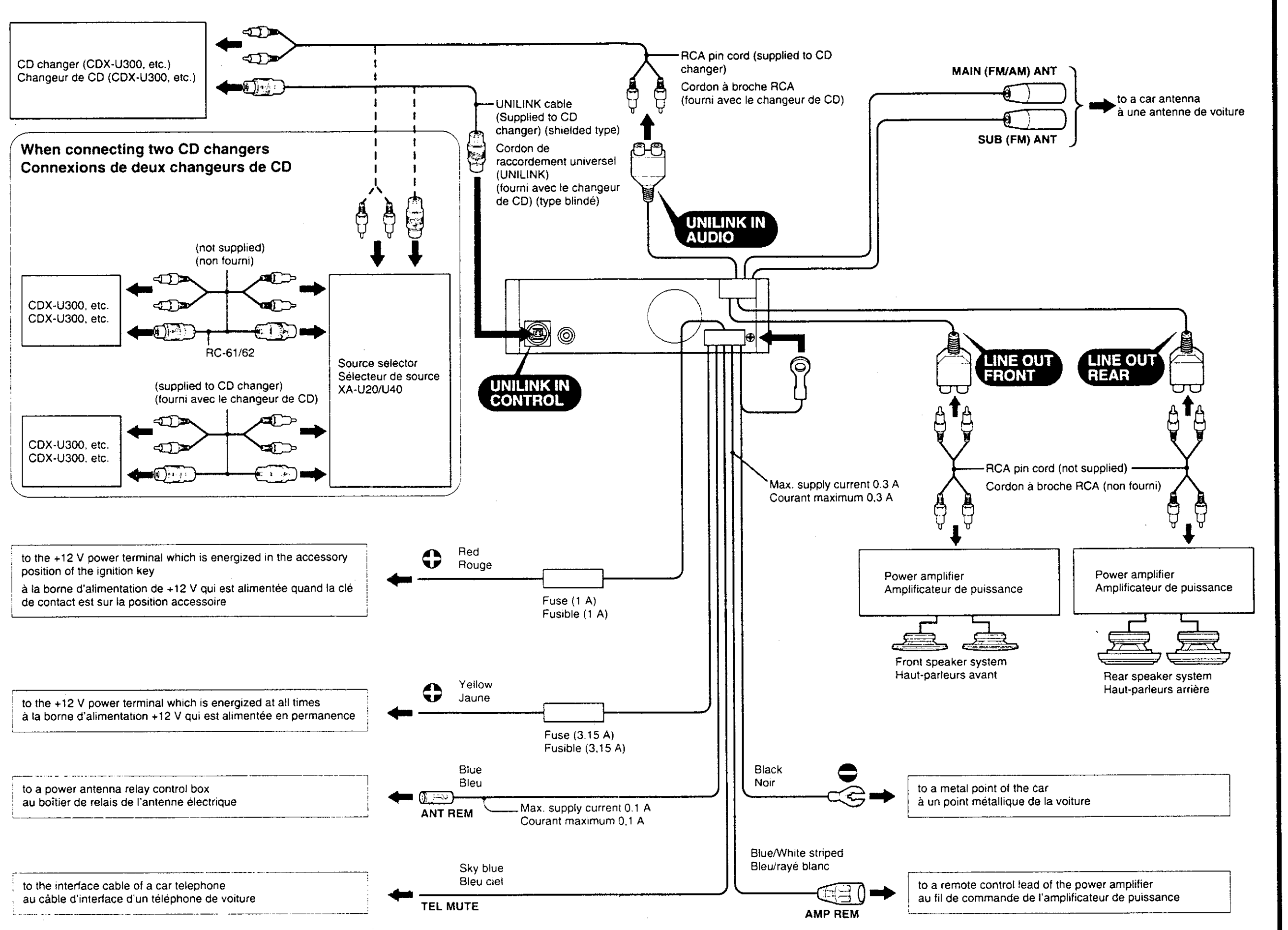

Press the reset button after completing the connections.

Notes on the control leads
- The power antenna control lead (blue) supplies +12 V DC when you turn on the tuner.
- A power antenna without relay box cannot be used with this unit.

Les connexions achevées, appuyer sur la touche de réinitialisation.

Remarques sur les fils de contrôle
- Le fil de contrôle de l'antenne électrique (bleu) fournit un courant continu de 12 volts quand le tuner est mis sous tension.
- Une antenne electrique sans boîtier de relais ne peut être utilisee avec cet appareil.

Connection Diagrams

- You can only connect the CD changer(s) which are compatible with the Sony UNILINK system.
- When you are connecting the Sony Mobile ES series CD changer XES-C1, you cannot connect it through the UNILINK IN AUDIO terminals of this unit. In this case, use the Sony digital UNILINK system connection featuring optical fiber cables.

Schémas de connexion

- Seuls les changeurs de CD compatibles avec le système UNILINK de Sony peuvent être raccordés.
- Dans le cas du changeur de CD XES-C1 de la série Mobile ES de Sony, il ne peut pas être raccordé par les bornes UNILINK IN AUDIO de cet appareil. Utiliser des câbles en fibres optiques pour la connexion du système numérique UNILINK.

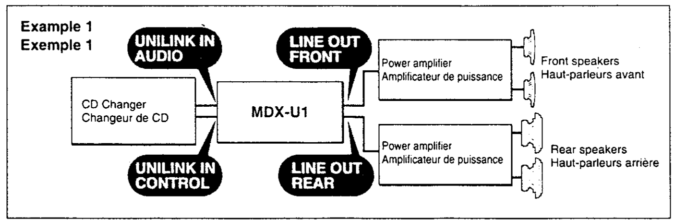

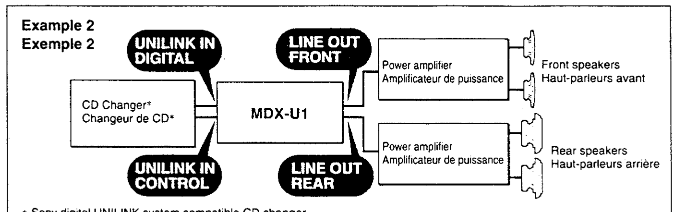

- * Sony digital UNILINK system compatible CD changer.
- * Changeur de CD compatible avec le système numérique UNILINK de Sony.

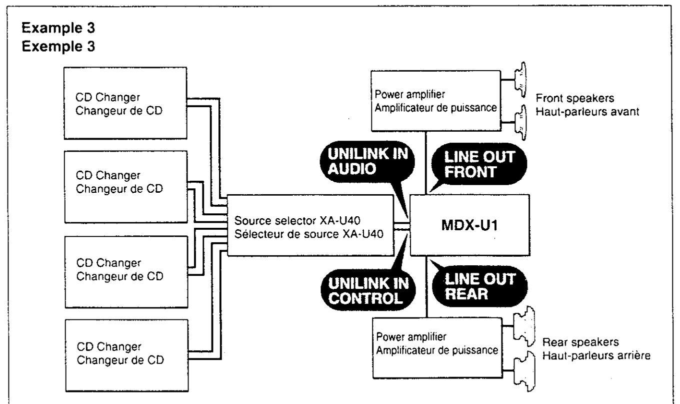

The use of the separately sold source selector XA-U20 or XA-U40 is necessary when connecting several CD changers.

Le sélecteur de source XA-U20 ou XA-U40, vendu séparément, est nécessaire pour raccorder plusieurs changeurs de CD.

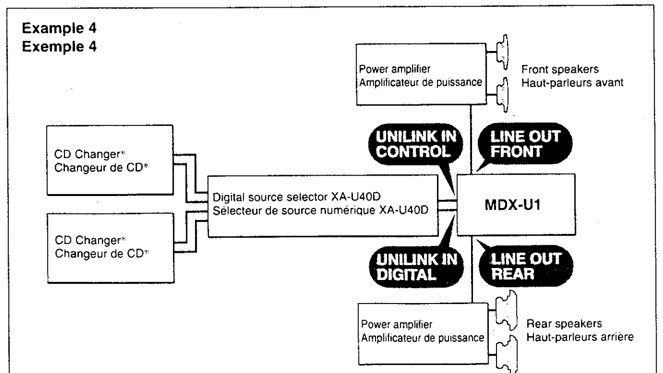

- * Sony digital UNILINK system compatible CD changer.
- * Changeur de CD compatible avec le système numérique UNILINK de Sony.

The use of the separately sold digital source selector XA-U40D is necessary when connecting several CD changers which are compatible with the Sony digital UNILINK system.

Le sélecteur de source XA-U40D, vendu séparément, est nécessaire pour raccorder plusieurs changeurs de CD qui sont compatibles avec le système numérique UNILINK de Sony.

Location and Function of Controls

Main Unit

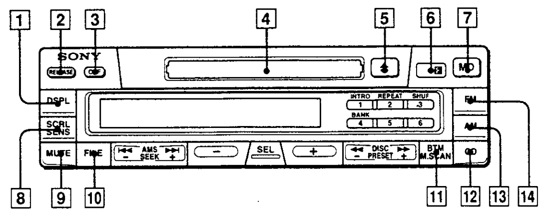

Refer to the pages in ● for details.

1. **DSPL (date/time set • display mode change) button ⓫⓬⓮⓱㉖㉙㊴**
2. **RELEASE (front panel release) button ⓾**
3. **OFF (power off) button**
4. **MiniDisc compartment ⓭**
5. **≜ (eject) button ⓮**
6. **Infrared receptor for the remote commander**
7. **MD (MiniDisc play) button ⓭**
8. **SCRL/SENS (Scroll/Sensitivity) button ⓮⓲**
9. **MUTE button**
   Press to mute the sound. Press again to restore the volume to the previous level. The function of this button will also be canceled when the (+) button is pressed.
10. **FILE (custom file) button ㉕㊱**
11. **BTM/M.SCAN (Best Tuning Memory/Memory Scan) button ⓮⓴㉓**
12. **CD (disc play/CD changer select) button* ㉙㉛**
    * When the CD changer(s) is(are) connected.
13. **AM (radio on) button ⓱**
14. **FM (radio on • FM1/FM2/FM3 band select) button ⓱**

Location and Function of Controls

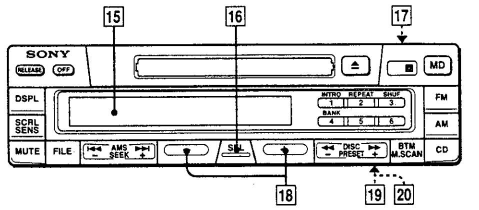

15. **Display window**
16. **SEL (control mode select/character set) button**
    Press to select the desired control mode: BAS (bass), TRE (treble), BAL (balance), FAD (fader) or VOL (volume).

Display window	Control mode	Press (−)	Press (+)
BAS	Bass control	For less bass	For more bass
TRE	Treble control	For less treble	For more treble
BAL	Balance control	To decrease the right-speakers' volume	To decrease the left-speakers' volume
FAD	Fader control	To decrease the rear-speakers' volume	To decrease the front-speakers' volume
VOL	Volume control	For less volume	For more volume

17. **Reset button (located on the left of the connector on the unit side when the front panel is detached)**
    Press this button with a ball-point pen etc. when the buttons of this unit do not function.
18. **(−) (+) (volume/bass/treble/balance/fader/character select) buttons**
    These buttons normally function as the volume control. To adjust other modes, press the (−) or (+) button within three seconds after selecting the desired mode with the SEL button. The control mode automatically goes back to the volume control mode in three seconds.
19. **POWER SELECT switch (located on the bottom of the unit)**
    See "POWER SELECT switch" in the Installation/Connections manual.
20. **FM DIVERSITY switch (located on the bottom of the unit)**
    See "FM DIVERSITY switch" in the Installation/Connections manual.

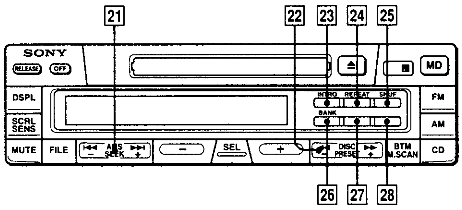

	During MiniDisc/CD play	During radio reception
21	**AMS (Automatic Music Sensor) button ⑮㉛**	**SEEK (automatic tuning) button ⑰㉒**
22	**DISC (manual search/disc search*) button ⑮㉚㉜**	**PRESET (preset search/manual tuning) button ⑲㉒㉔**
23	**INTRO (intro scan) button ⑯㉟**	**Preset number buttons ㉒㉔**
24	**REPEAT (repeat play) button ⑯㉞**	
25	**SHUF (shuffle play) button ⑯㉝**	
26	**BANK button* ㊷**	
27	–	
28	–	

* Only when the optional CD changer(s) is(are) connected.

Changing the illumination color of the control buttons

Press the INTRO 1 button while pressing the SEL button.

Muting the beep tone

Press the 6 button while pressing the SEL button. To obtain the beep tone again, press these buttons once more.

Remote Commander

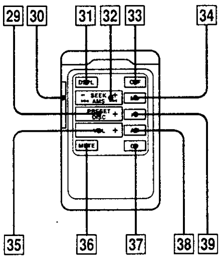

Buttons of the same function as those on the main unit

	During MiniDisc/CD play	During radio reception
32	**AMS (automatic music sensor) button ⑮㉛**	**SEEK (automatic tuning) button ⑰㉒**

33 **OFF button**

34 **MD (MiniDisc play) button ⑬**

36 **MUTE button**

37 **CD (disc play/CD changer select) button ㉙㉛**

38 **AM (radio on) button ⑰**

39 **FM (radio on • FM1/FM2/FM3 band select) button ⑰**

Different function buttons

	During MiniDisc/CD play	During radio reception
29	**DISC (manual search*/disc search) button ⑮㉚**	**PRESET (preset search) button** ** ㉔**

* You cannot do the manual search during CD play.
** You cannot do the manual tuning with the remote commander.

30 **M.ILL (memory illumination) switch**
To illuminate the buttons on the remote commander, slide down this switch. The illumination will go off automatically after approximately 15 seconds.

31 **DSPL (display mode change) button ⑭⑰㉖㉙㊴**

35 **VOL (volume control) button**

When the POWER SELECT switch is set to the OFF position, the unit cannot be operated with the remote commander unless one of the MD,FM,AM or CD buttons on the unit is pressed or a MiniDisc is inserted to activate the unit first.

Installing the Batteries

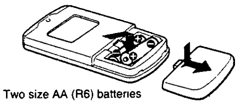

Two size AA (R6) batteries

Battery life
When the batteries become weak, you will not be able to operate the unit with the remote commander. Battery life is approx. six months although it depends on the way of use.

Notes on batteries
To avoid damage from battery leakage and corrosion:
— insert the batteries with correct polarity
— do not use an old battery with a new one, or different types of batteries together
— remove the batteries when you do not use the unit for a long period of time
— do not charge the batteries.

If any battery leakage occurs, replace the batteries with new ones after cleaning the battery compartment.

Installing the Supplied Remote Commander

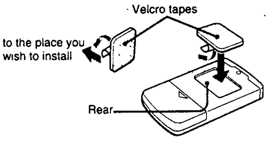

Install the remote commander with velcro tape in a desired place.

Notes
- Do not install or leave the remote commander in a location near any heat sources, or in a place subject to direct sunlight (especially on the dashboard in summer etc.).
- When you park the car in direct sunlight, detach the remote commander and place it in a location not subject to direct sunlight such as the glove-box.
- Before installing the remote commander, be sure to confirm whether you can remote control the unit from the place you intend to install.
- Before attaching the velcro tape, clean the surface.

Detaching and Attaching the Front Panel

Detaching the Front Panel

Before detaching the front panel, be sure to press the OFF button first. Then press the RELEASE button to open up the front panel and detach the panel by pulling it towards you as illustrated.

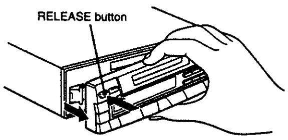

Be sure not to drop the front panel when detaching it from the unit.

Note
The display window may become warm while the unit is operated, however, this is not a sign of a malfunction.

Attaching the Front Panel

Apply the right hand side of the front panel to the unit by attaching the part Ⓐ of the front panel to the part Ⓑ of the unit as illustrated and push until it clicks.

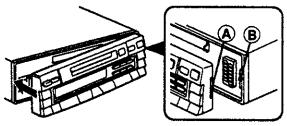

Do not press hard or give excessive pressure to the display window of the front panel.

Caution alarm
If you turn the ignition key to the OFF position without removing the front panel, the caution alarm will be activated and a beep tone will be heard for a few seconds (only when the POWER SELECT switch is set to the ON position).

Notes
- Make sure that the front panel is the right way up when attaching it to the unit as it cannot be attached upside down.
- Do not press the front panel hard against the unit when attaching it to the unit. It can be easily attached by pressing it lightly against the unit.
- Never leave the detached front panel in your car if it is parked in direct sunlight as there could be a considerable rise in temperature inside the car.
- When you carry the front panel with you, put it in the supplied front panel case.

Setting the Calendar Clock

2,3,4

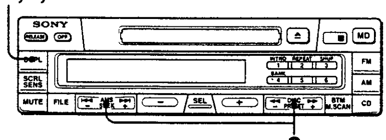

3

The clock section has a 12-hour digital indication.

How to Set the Time

For example, set it to 10:08 A.M.

1 Turn the ignition key to the ON position.

2 Press the DSPL button if the clock indication does not come on.

DSPL — JAN 1 1:00

3 Press the DSPL button for more than two seconds.

DSPL — AM 1:00

While holding down the DSPL button

Press [AMS SEEK] to set the hour digits
(to go back) (to go forward)

AM 10:00

Press [DISC PRESET] to set the minute digits
(to go back) (to go forward)

AM 10:08

4 The calendar clock will start activating when you take your finger off the DSPL button.

JAN 1 10:08

Notes
- You cannot set the calendar clock with the supplied remote commander.
- If the POWER SELECT switch of the unit is set to the OFF position, the calendar clock cannot be set unless the power is turned on. Set the calendar clock after you turn on the radio, start CD play, or MiniDisc play.

Setting the Calendar Clock

1,2

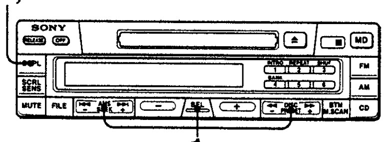

1

How to Set the Date

For example, set it to July 17.

1 While holding down the DSPL button for more than two seconds as described in step 3 of "How to Set the Time", press the SEL button.

DSPL SEL — JAN 1-10:08

While holding down the DSPL button

Press [AMS SEEK] to set the month.
(to go back) (to go forward)

JUL 1-10:08

Press [DISC PRESET] to set the day.
(to go back) (to go forward)

JUL 17-10:08

2 The calendar clock will start activating when you take your finger off the DSPL button.

JUL 17 10:08

Playing a MiniDisc

1

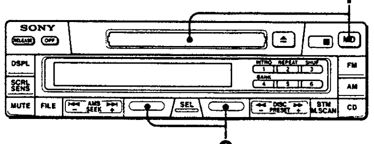

2

1 Insert a MiniDisc to start playback.

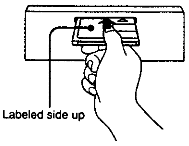

The MiniDisc will be loaded and the title of the MiniDisc* will be displayed on the display window momentarily then playback will start from the first track with its title being displayed.

If a MiniDisc is already inserted, press the MD button.

After the title of the MiniDisc has been displayed, the title of the currently played track* will be displayed. If the title is too long (more than 12 characters)** it will be scrolled across the display window.

2 Adjust the volume with the ⊖ or ⊕ button.

When the last track on the MiniDisc is over
The track number indication will return to "1" and the playback will restart from the first track of the MiniDisc.

Notes
- If a MiniDisc is already loaded in the unit, never try to insert another MiniDisc. Doing so may damage the unit.
- Do not insert a MiniDisc with its labeled side down.

* Only if these titles are prerecorded on the MiniDisc.
**However, if the title contains more than 32 characters (including blank spaces), only up to the 32nd character will be displayed.

Playing a MiniDisc

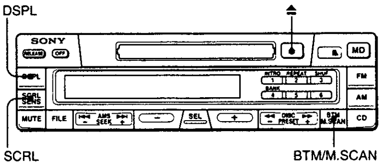

Ejecting the MiniDisc

Press the ⏏ (eject) button.

To get the calendar clock display during MiniDisc play

Press the DSPL button until the calendar clock display appears.

To manually get the title of the currently played MiniDisc or the track displayed

Press the DSPL button until the desired display appears on the display window.

If the currently played MiniDisc is not prerecorded with these data, the display will not change.
If the title is too long, you can have it scrolled* across the display window by pressing the SCRL button.

To get the date of the recording of the currently played MiniDisc

Press the BTM/M.SCAN button while playing back a MiniDisc.
The date of recording will be displayed for approx. three seconds.

This function will work only if the date of recording is registered on the MiniDisc.

Every time the DSPL button is pressed during playback, the display mode of the unit changes cyclically as follows:

Track title display mode
↓
MiniDisc title display mode
↓
Elapsed playing time display mode
↓
Calendar clock display mode

* Up to 32 characters only.

Locating a Desired Track or Part of a Track

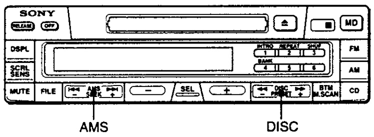

You can use this function to quickly locate your desired track or a part of a track.

Locating the Beginning of a Track
— AMS function

Press the AMS button while playing a MiniDisc.

To listen to the current track again from the beginning ➔

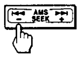

If the button is kept pressed, the beginnings of the previous tracks will be located.

To listen to the next track from the beginning ➔

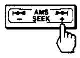

If the button is kept pressed, the beginnings of the succeeding tracks will be located.

Note
When you keep pressing the AMS button and come to either the beginning or end of a MiniDisc, you will not be able to go any further.

Searching for a Desired Part of a Track
— Manual Search

Keep the DISC button pressed while playing a MiniDisc.

To fast reverse ➔

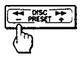

To fast forward ➔

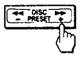

The elapsed playing time of the track will be displayed on the display window during the manual search.

Note
If the DISC button is kept pressed and the end of the MiniDisc has been reached, "¬¬ ¬¬" will appear on the display window.
Likewise if the beginning of the MiniDisc has been reached, "LL LL" will appear on the display window.

Playing in Other Modes

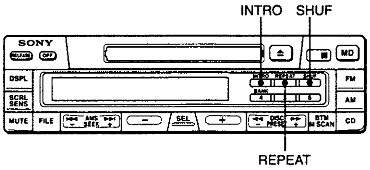

Playing the Tracks Randomly
— Shuffle Play Function

Press the SHUF 3 button to get the "SHUF 1" indication while playing the MiniDisc.
Every track on the MiniDisc will be played randomly once.
To cancel the mode, press the button again.

Playing a MiniDisc Repeatedly
—Repeat Play Function

Press the REPEAT 2 button to get the "REP 1" indication while playing the MiniDisc.
When the currently played track is over, that track will be played again from the beginning.
To cancel the mode, press the button again.

Searching for a Desired Track by Listening to the First 10 seconds of Each Track — *Intro Scan Function**

Press the INTRO 1 button to get the "INTRO" indication while playing the MiniDisc.
The first 10 seconds of every track on that MiniDisc will be played in order.
To cancel the mode, press the button again.

* If the INTRO button is pressed while the unit is in the shuffle play mode, the first 10 seconds of every track will be played randomly.

Searching for the Stations Automatically
— Automatic Tuning

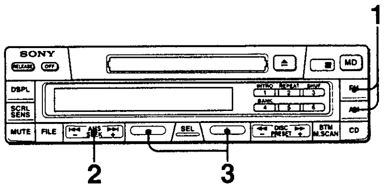

If you do not know the frequency of the station you wish to tune in, it is useful to use the Automatic Tuning function.

1 Select the desired band .

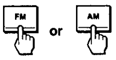

2 Press the SEEK button.

The scanning stops when a station is received. Press the button repeatedly until the desired station is received.

3 Adjust the volume with the ⊖ or ⊕ button.

While receiving FM broadcasting

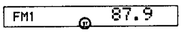

The "ST" indication will appear when an FM stereo program with sufficient signal strength is tuned in. The program will be received in stereo.

Getting the calender clock indication while listening to the radio
Press the DSPL button. Each time you press the button, the display mode changes as follows:

Station name display mode*
↓
Frequency display mode
↓
Calender clock display mode

* Refer to page 26 for the station name display mode.

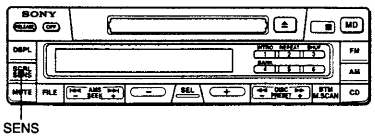

SENS

Avoiding the Automatic Tuning from Stopping on Stations Too Frequently
— Local Seek Mode

Press the SCRL SENS button lightly to get the "LCL" indication.

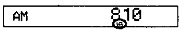

The mode changes to the local seek mode where only the stations with relatively strong signals are tuned in. It functions only when the Automatic Tuning is in operation.

If FM Stereo Broadcasting is Difficult to Receive — *Monaural Mode*

Press the SCRL SENS button lightly to get the "MONO" indication.

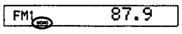

The sound will improve, but it will become monaural.

Each time you press the SENS button, the mode changes as follows:

While receiving FM broadcasting

LCL → MONO → cancel (Normal mode) → (back to LCL)

While receiving AM broadcasting

LCL → cancel (Normal mode) → (back to LCL)

Tuning in by Adjusting the Frequency
— Manual Tuning

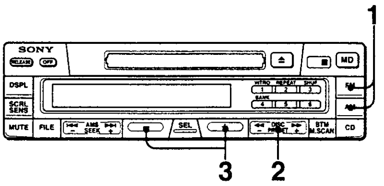

Use the Manual Tuning if you know the frequency of the desired station.

1 **Select the desired band.**

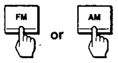

2 **Press the PRESET button for more than 0.5 second.**

For lower frequencies For higher frequencies

To change the frequency rapidly, keep the button pressed.

3 **Adjust the volume with the ⊖ or ⊕ button.**

Note
You cannot use the Manual Tuning with the remote commander.

PREVENTING ACCIDENTS!
While you are driving, the use of the Automatic Tuning and the BTM function is recommended in favor of the Manual Tuning.

Memorizing the Stations Automatically
— BTM (Best Tuning Memory) Function

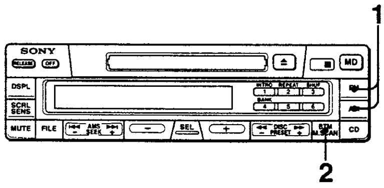

Clearest receiving stations are automatically searched and memorized on each band (FM1, FM2, FM3 and AM). Up to 6 stations on each band can be stored on the preset number buttons 1 to 6 in order of frequency.

1 **Select the desired band.**

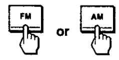

2 **Keep the BTM button pressed for more than two seconds.**

The receivable frequencies of FM1, FM2 and FM3 are the same
Therefore, 18 stations can be memorized on FM.

The BTM function — how this function operates

This function starts by searching stations from the lowest frequency of the currently tuned in band. When a station is located, it will be stored in the memory on the preset number button whose number is indicated on the display window. If there is no preset number indicated, it will be stored in the memory on the preset number button 1 onward. It continues to store the stations in the memory until all the preset number buttons are occupied.
For example, if the FM1 band was selected, it will continue until the preset number button 6 on the FM3 band is occupied.
When all the preset number buttons are occupied with the memories before the highest receivable frequency is searched, the unit will start searching for higher frequencies from where it was left off. This is to check if there are any more stations with clearer receptions than the ones already stored in the memory.
If a station with a clearer reception is found, the unit will store it in the memory in place of a station with an inferior reception.
Lastly, it rearranges all the stations in order of frequency from the lowest and stores them in the memory. The whole operation is now completed. The stations with clearer receptions are stored in the memory on the preset number buttons in order of frequency.

Notes
- There may be cases where there are not enough receivable stations due to the lack of stations in the vicinity or weak broadcasting signals. In such cases, the BTM operation may stop without all the buttons being occupied with memories.
- If you start the BTM operation from the FM1 band, it will continue to store stations in the memory on the FM3 band. Care must be taken if you wish to keep the stored stations on the FM3 band.
- If you start the BTM operation from the FM3 band, it will stop when all the memories on the FM3 band are occupied. It will not continue to the FM1 band.

Memorizing Only the Desired Stations

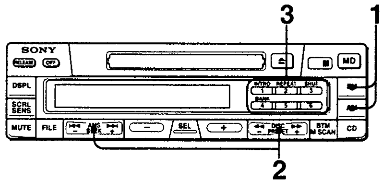

Up to 6 stations on each band (FM1, FM2, FM3 and AM) can be stored in the memory in order of your choice.

For example, store a station on the preset number button 1.

1 **Select the desired band.**

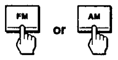

2 **Tune in to the station which you wish to store on the preset number button (page 17 or 19).**

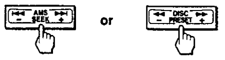

3 **Keep the preset number button pressed for about two seconds until the "MEM" indication comes on the display window.**

The number of the preset number button of which you are pressing now comes on the display window. When the "MEM" indication comes on, the station is stored in the memory and the operation is now completed. The "MEM" indication goes off after a while.

Repeat the same procedure to store other stations.

Only one station per band (FM1, FM2, FM3 and AM) can be stored in the memory on each preset number button
If you try to store another station on the same preset number button, the previously stored station will be erased.

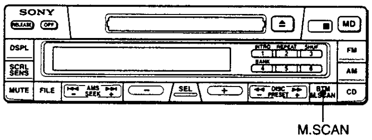

Checking All the Memorized Stations in Order — Memory scan

Press lightly.

The tuner will receive in order, all the stations stored in the memory for five seconds each.

Receiving Stations Stored in the Memory

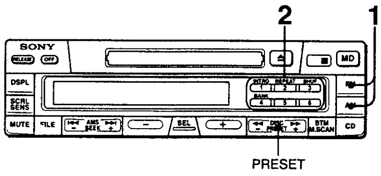

1 **Select the desired band.**

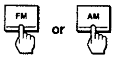

2 **Press the preset number button lightly on which the desired station is to be stored.**

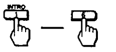

Notes
- There may be cases where even the stations which are stored in the memory cannot be received due to weak signals in the vicinity of your car.
- If you keep the preset number button pressed for more than two seconds, the currently received station will be memorized. To receive the previously memorized station, make sure that the preset number button is pressed lightly.

Receiving in Order the Stations Stored in the Memory — Preset Search Function

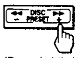

(Press lightly.)

The number will advance in the following order:

1 ➡ 2 ➡ 3 ➡ 4 ➡ 5 ➡ 6 ➡ 1 ➡ ...
(number of the preset number buttons)

(Press lightly.)

The number will reverse in the following order:

1 ➡ 6 ➡ 5 ➡ 4 ➡ 3 ➡ 2 ➡ 1 ➡ ...

Note
Make sure that you press the PRESET button lightly. If you keep it pressed fore more than 0.5 second, the unit will enter the Manual Tuning mode.

Displaying the Name of Each Station
— Station Memo Function

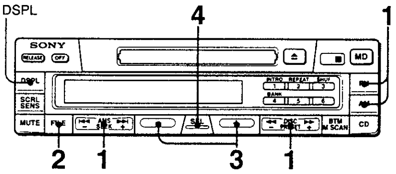

You can store the names of radio stations in the memory of tuner. The name of station can be displayed on the display window while it is tuned in.

Storing the Station Names in the Memory of the Tuner

1 **Tune in to a station whose name you wish to register.**

2 **Press the FILE button for more than two seconds to enter the name edit mode.**

3 **Press either the ⊖ or ⊕ button to select the desired characters.**

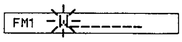

Each time you press the ⊖ or ⊕ button, characters will come on in the following order:

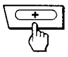

➡ _→A→B→C→...→X→Y→Z→0→1→2→3→...

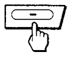

➡ _→.→(→)→\→/→*→–→+→9→...

4 **Press the SEL button after locating the desired character.**

The flashing part will move to the next space on the right.
Repeat steps 3 and 4 to enter the entire name.
Up to eight characters only can be used per name.

Notes
- If you press the SEL button when the eighth character (farthest right character) is flashing, the flashing part goes back to the first character (farthest left character).
- If you wish to put a blank space after a character, select "_" (under-bar).

Displaying the Name of Each Station

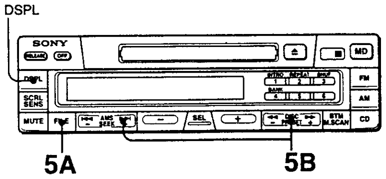

5 **To register the name, use one of the following two methods.**

A **Press the FILE button for more than two seconds.**

The unit will go back to the normal mode.

B **Tune in to another station by pressing the SEEK or MANU button and repeat the procedures.**

You can also change the band and repeat the process.

Notes
- If you turn off the tuner before you complete this procedure, the name you have just entered will not be registered.
- You can store up to 40 names, but if you try to enter more, the "MEMORY FULL" indication will come on the display window and you will not be able to register them. You can register more names after erasing some of the existing names.

Displaying the Station Names

While listening to the radio, press the DSPL button to enter the name display mode.

FM1 WRKISS

If the name of the station is not registered, "--------" will come on the display window.

Each time you press the DSPL button while listening to the radio
The display mode changes cyclically as follows:

Station name display mode
↓
Frequency display mode
↓
Calender clock display mode

Editing the Registered Station Names

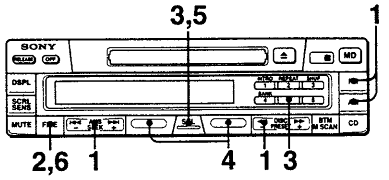

Erasing the Station Names

1 **Turn the radio on and tune in to any station.**

2 **Press the preset FILE button for more than two seconds to enter the name edit mode.**

The currently received station will come on the display window.

3 **Press the preset number button 5 while pressing the SEL button.**

4 **Press either the ⊖ or ⊕ button to search the names you wish to erase.**

The station names stored in the memory of the tuner will come on the display window in the same order as they were registered*.

5 **Press the SEL button for more than two seconds to erase the displayed name.**

Repeat steps 4 and 5 to erase the other station names.

6 **Press the FILE button for more than two seconds.**

The unit will go back to the normal mode.

The alternative method to erase the name
In the step 3 of "Changing the Station Names" (page 28), put the eight under-bars ("_"), then press the FILE button for more than two seconds. The displayed station name will be erased.

* If you have erased some of the titles before, they will not come on in the same order as they were registered.

Editing the Registered Station Names

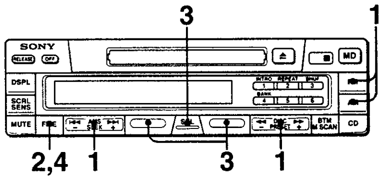

Changing the Station Names

1 **Tune in to the station whose name you wish to change.**

2 **Press the FILE button for more than two seconds to enter the name edit mode.**

The currently received station will come on the display window.

3 **Press the SEL button to make the part you wish to edit flashing. Select the characters using the ⊖ or ⊕ button.**

If you wish to change the names of other stations, repeat steps 1 to 3 on the stations after tuning in to them with the SEEK or MANU button.

4 **Press the FILE button for more than two seconds.**
The new station names are registered.

Listening to the CD Play

— When Optional Sony CD Changers are Connected

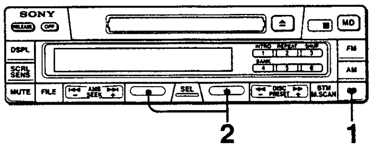

1 **Press the CD button.**

CD changer number　Track number

CD1 1 1 1.30

CD play will start.　Disc number　Elapsed playing time

2 **Adjust the volume with the ⊖ or ⊕ button.**

If it is set in the normal playing mode, after the end of a disc, the disc with the next number shown will be automatically played. If two or more CD changers are connected, after the end of the last disc, the first disc in the CD changer with the next number shown will be played. The order of the CD play can be rearranged by changing the playing modes. For details, see "Playing in Other Modes." (page 33)

Getting the calender clock display while listening to a CD
Press the DSPL button. Each time you press the button, the display mode will change cyclically as follows:

Disc number, track number, elapsed playing time display mode
↓
Title display mode*
↓
Calender clock display mode

* It is necessary to put titles onto the discs in advance. See pages 36 and 37 for details.

Locating a Desired Disc, Track or Part of a Track

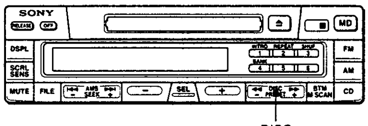

DISC

You can use this function to quickly locate your desired disc, track or part of the track.

Searching Your Desired Discs in Turn
— Disc Search

Press the DISC button lightly during CD play.

To search previous disc numbers →

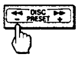

To search the disc numbers ahead →

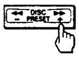

You can search a disc by displaying the titles of the discs registered with the Custom File Function. For details, see page 36.

Note
Make sure that you press the DISC button lightly. If you keep it pressed, the unit will enter the Manual Search mode.

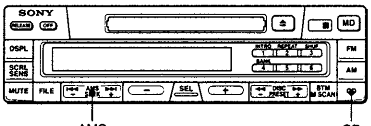

AMS CD

Listening to the Discs in Another CD Changer *(when two or more CD changers are connected)*

Press the CD button during CD play.

The CD changer number changes.

Locating the Beginning of a Track
— AMS Function

Press the AMS button during CD play.

To listen to the current track again from the beginning →

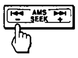

If the button is kept pressed, the beginnings of the previous tracks will be located.

To listen to the next track from the beginning →

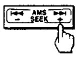

If the button is kept pressed, the beginnings of the succeeding tracks will be located.

Note
When you keep pressing the AMS button and come to either the beginning or end of a disc, you will not be able to go any further.

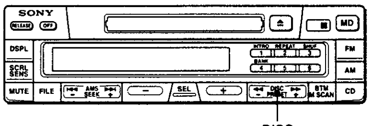

DISC

Searching for a Desired Part of Track
— Manual Search

Keep the DISC button pressed during CD play.

To go back →

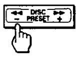

(Keep on pressing)

To go ahead →

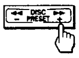

(Keep on pressing)

The elapsed playing time of the track will be displayed on the display window during the manual search.

Note
You cannot use the Manual Search with the remote commander.

Playing in Other Modes

SHUF

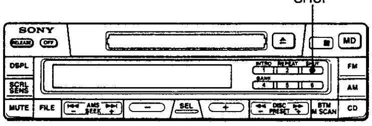

Playing the Discs Randomly
— Shuffle Play Functions

Playing the tracks on the currently selected disc randomly — Disc shuffle play

Press the SHUF 3 button to get the "SHUF 1" indication during CD play.

When all the tracks on a disc have been played, it goes on to the next disc.

Playing every track on every disc in the currently selected CD changer randomly — CD changer shuffle play

Press the SHUF 3 button to get the "SHUF 2" indication during CD play.

Playing every track on every disc in all CD changers connected randomly — All shuffle play (when two or more CD changers are connected)

Press the SHUF 3 button to get the "SHUF 3" indication during CD play.

The function of the SHUF button changes cyclically as follows:

SHUF 1
(Disc shuffle)
↓
SHUF 2
(CD changer shuffle)
↓
SHUF 3*
(All-shuffle)
↓
Cancel
(Normal CD play)

* All-shuffle play (SHUF 3) mode functions only when two or more changers are connected to the unit. When only one changer is connected, the "SHUF 3" indication will not be displayed. In this case, if you press the SHUF button again while the "SHUF 2" indication is being displayed, the shuffle play will be canceled.

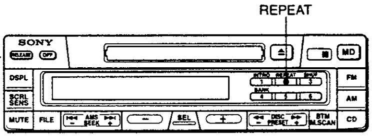

Playing a Disc Repeatedly
— Repeat Play Functions

Playing the currently selected track repeatedly — Track repeat

Press the REPEAT 2 button to get the "REP 1" indication during CD play.

When the track is over, the CD play will be repeated from the beginning of that track.

Playing the currently selected disc repeatedly — Disc repeat

Press the REPEAT 2 button to get the "REP 2" indication during CD play.

When the last track of the currently selected disc is over, the CD play will be repeated from the beginning of that disc.

Playing the discs in the currently selected CD changer repeatedly — CD changer repeat (when two or more CD changers are connected)

Press the REPEAT 2 button to get the "REP 3" indication during CD play.

When the last disc of the currently selected CD changer is over, the CD play will be repeated from the first disc in the currently selected CD changer.

The function of the REPEAT button changes cyclically as follows:

REP 1
(Track repeat)
↓
REP 2
(Disc repeat)
↓
REP 3*
(CD changer repeat)
↓
Cancel
(Normal CD play)

• CD changer repeat (REP 3) mode functions only when two or more changers are connected to the unit. When only one changer is connected, the "REP 3" indication will not be displayed. In this case, if you press the REPEAT button again while the "REP 2" indication is being displayed, the repeat play will be canceled.

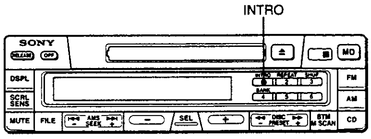

Searching for a Desired Track by Listening to the First 10 Seconds of Each Track
*— Intro Scan Function**

Press the INTRO 1 button during CD play.

The first 10 seconds of all the tracks on the currently selected disc will be played in order.
When the first 10 seconds of the last track on a disc is played, it will move on the the next disc.
When the first 10 seconds of the last disc in the first CD changer has been played, the first disc in the next CD changer will be played (only when two or more CD changers are connected).

• If the INTRO button is pressed while the unit is in the shuffle play mode, the first 10 seconds of every track will be played randomly.

When you find the desired track
Press the INTRO button once more. The intro scan function will be canceled and you can continue to listen to the track.

Displaying the Title of Each Disc
— Disc Memo Function

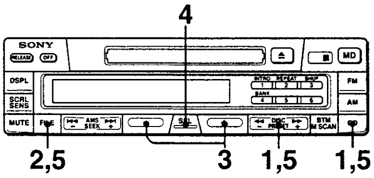

You can put a title of your own choice to a disc (one title per disc). The title can be displayed on the display window while the disc is being loaded and played.

Putting Your Personalized Titles onto the Discs

1 **Play the disc that you wish to title.**

2 **Press the FILE button for more than two seconds to enter the name edit mode.**

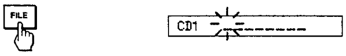

3 **Press either the (–) or (+) button to select the desired characters.**

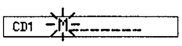

Each time you press the (–) or (+) button, characters will come on in the following order:

(+) ➡ _→A→B→C→...→X→Y→Z→0→1→2→3→...

(–) ➡ _→.→(→)→\→/→*→–→+→9→...

4 **Press the SEL button after locating the desired character.**

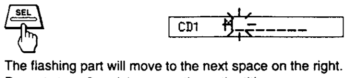

The flashing part will move to the next space on the right.
Repeat steps 3 and 4 to enter the entire titles.
Up to eight characters only can be used per disc.

Notes
• If you press the SEL button when the eighth character (farthest right character) is flashing, the flashing part goes back to the first character (farthest left character).
• If you wish to put a blank space after a character, select "_" (under-bar).

5 **To register the title, use one of the following methods ① through ④.**

① Press the FILE button for more than two seconds.

The unit will go back to the normal CD playing mode.

② Press the FILE button lightly.

(Press lightly.)

The unit enters the PLAY/SKIP mode in which the play and skip modes can be set. (Continue to step 4 in "Setting the Play and Skip Modes on the Discs" of page 40.)

③ Press the DISC button lightly.

You can change the disc and continue to put the titles to the discs.

(Press lightly.)

④ Press the CD button. (only when two or more CD changers are connected)

You can go to the next CD changer and the unit will go back to the normal playing mode.

Where are the contents of the custom file stored?
The information registered in the custom file will be stored in the memory of currently selected CD changer. You can play a custom-filed disc in another CD changer and use the custom file function as long as they are connected to the currently selected CD changer with the UNILINK system.

You can register the maximum of 110 discs on one CD changer
If you try to register more than 110 discs, the unit will display "MEMORY FULL" on the display window and will not accept the command for custom-filing. In this case, you will have to erase the memory of the other discs before you enter the new ones. See page 44 for details on erasing the memory.

When two or more CD changers are connected
The information registered in the custom file can be retrieved by other CD changers using the communication signals sent between the CD changers provided that they are connected by UNILINK cables.

DSPL

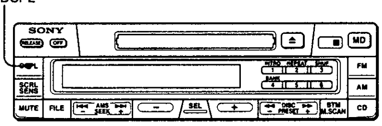

Displaying the Title

While the disc is playing, press the DSPL button to enter the title display mode.

CD1 MADONNA

If the title of a disc is not registered, "- - - - - - - -" will come on the display window.

While loading the discs
Whatever the display mode is, the indication automatically changes as follows:

Title of the disc (2 seconds) → Disc and track number (2 seconds) → Currently selected display mode

The registered titles of the discs may not come on the display window immediately during loading. This occurs because the unit displays the title after identifying the disc by reading the TOC* (Table of Contents) information of the disc. Therefore, while the CD changer is loading the disc for the first time, the registered title of the disc cannot be displayed. Once the disc has been loaded and played, the TOC information would have been read and the title will be displayed even while the disc is being loaded.

Each time you press the DSPL button while the disc is playing
The indication on the display window will change cyclically as follows:

Disc number, track number, elapsed playing time display mode
↓
Title display mode
↓
Calender clock display mode

* The TOC information of the disc contains the total length of playing time and the codes to search the beginning and end of each track, and so on.

Playing Selected Tracks on a Disc — *Bank Function*

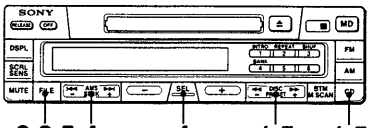

2,3,5 4 4 1,5 1,5

You can listen to only the desired tracks by using this function.

Setting the Play and Skip Modes on the Discs

1 **Play the disc to which you wish to set these modes.**

2 **Press the FILE button for more than two seconds and put the titles onto the discs.**

See page 36 for details about putting on a title. If the title has already been registered, go to step 3.

3 **Press the FILE button lightly to enter the PLAY/SKIP edit mode.**
When the unit enters the PLAY/SKIP edit mode, the indication on the display window will look like the illustration below.

CD1 5 1 PLAY

4 **Press the AMS button to select the track number you wish to skip and press the SEL button.**

CD1 5 3 SKIP

The indication changes from "PLAY" to "SKIP". If you wish to return to "PLAY", press the SEL button again.

Repeat the operation in this step to set either the "PLAY" or "SKIP" mode on all the tracks.

Notes
* When the title is not registered, you cannot enter the PLAY/SKIP edit mode even if you press the FILE button.
* You can only set the "SKIP" mode onto up to 24 tracks. If a disc has more than 24 tracks, you will not be able to set the SKIP mode on the tracks after the 24th track.
* You cannot set the SKIP mode onto all of the tracks on a disc.

5 **To register the settings, use one of the following methods ① to ④.**

① Press the FILE button for more than two seconds.

The unit will go back to the normal CD playing mode.

② Press the FILE button lightly.

(Press lightly.)

The unit will re-enter the name edit mode. See page 36.

③ Press the DISC button lightly.

(Press lightly.)

You can change the disc and continue to put the titles to the discs.

④ Press the CD button (only when two or more CD changers are connected).

You can go to the next CD changer and the unit will go back to the normal playing mode.

Playing Selected Tracks on a Disc

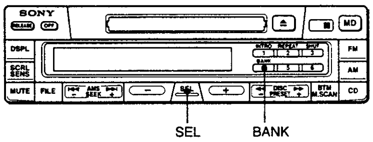

You can listen to only the desired tracks by using this function.

Playing with the Bank Function

To play the tracks with "PLAY" settings

Press the BANK button during CD play.

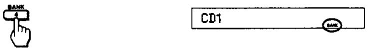

The "BANK" indication will come on the display window. The unit will start playing the tracks with "PLAY" settings which have been set by the PLAY/SKIP mode.

To go back to the normal playing mode
Press the BANK button again.

To play the tracks with "SKIP" settings

Press the BANK button while pressing the SEL button.

The "BANK" indication will come on the display window. The unit starts playing the tracks with "SKIP" settings which have been set by the PLAY/SKIP mode.

To go back to the normal playing mode
Press the BANK button while pressing the SEL button.

Editing a Custom File

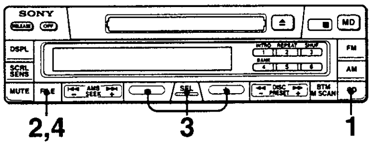

When you change the title, the PLAY/SKIP settings of the Bank function will not be erased at the same time.

Changing the Title and the PLAY/SKIP Settings

1 **Play the disc you wish to edit.**

2 **Press the FILE button for more than two seconds to enter the name edit mode.**

The title of the currently played disc will appear on the display window.

3 **Press the SEL button to make the part you wish to edit flashing. Select the characters using the ⊖ or ⊕ button.**

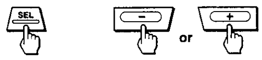

If you wish to change the titles of other discs, repeat steps 1 to 3 on the discs after changing them with the DISC or CD button.

4 **Press the FILE button for more than two seconds.**

Now the new title is registered.

Note
If you wish to change the PLAY/SKIP settings of the Bank function, press the FILE button lightly to enter the PLAY/SKIP mode while the unit is in the name edit mode in step 2. While checking the disc and track numbers on the display window, change the setting by the AMS and SEL buttons. Press the FILE button lightly again and the unit will enter the name edit mode again.

Editing a Custom File

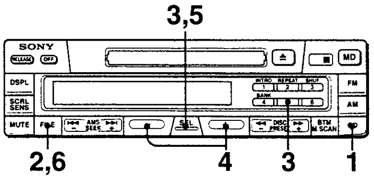

If you erase the title, the PLAY/SKIP settings of the Bank function will be erased as well.

Erasing a Title

1 **Select the CD changer and play any disc.**

2 **Press the FILE button for more than two seconds to enter the name edit mode.**

The title of the currently played disc will appear on the display window.

3 **Press the preset number button 5 while pressing the SEL button.**

4 **Press the ⊖ or ⊕ button to search for the title you wish to erase.**

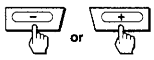

The titles stored in the CD changer currently selected will appear on the display window in the same order as they were registered*.

5 **Press the SEL button for more than two seconds after the title you wish to erase is displayed.**

Repeat steps 4 and 5 on other titles, if necessary.

6 **Press the FILE button for more than two seconds.**

Now the title and the PLAY/SKIP settings are erased. The unit goes back to the normal CD playing mode.

The alternative method to erase a title
You can erase a title by selecting eight "_"s (under-bars) as described in step 3 of "Changing the Title and the PLAY/SKIP Settings". (page 43)

*If you have erased some of the titles before, they will not come on in the same order as they were registered.

SECTION 2
DIAGRAMS

2-1. IC PORT FUNCTION DESCRIPTION
MD SERVO BOARD IC514 ~~(μPD78138GF)~~ μPD78136GF-030-3B9

Pin No.	Port No.	Port Name	I/O	Description
1	P34	KYENB	O	TEST KEY (No. 42 to 49 buttons) enable or not designation out. High: ENABLE, Low: INHIBIT
2		SI	I	DATA of the communication between MASTER μ-COM and MECHA μ-COM in.
3		SO	O	DATA of the communication between MASTER μ-COM and MECHA μ-COM out.
4		SCK	I	CLOCK of the communication between MASTER μ-COM and MECHA μ-COM in.
5	NMI	WP	I	Control port for ACTIVE/SLEEP of MECHA μ-COM. High: ACTIVE, Low: SLEEP
6	INT0	DQSY	I	(Not used) Open.
7	INT1	SQSY	I	SUBQ SYNC interruption. Interrupted at ↓.
8	INT2	ATSY	I	ADIP SYNC interruption. Interrupted at ↓.
9		DEFECT		(Not used) Open.
10		DEFECT		(Not used) Open.
11	P26	CS	I	MASTER μ-COM transfer request on the communication between MASTER μ-COM and MECHA μ-COM. Request at ↓.
12	P27	CS	I	The same as pin ⑪.
13	P30	5VPOWER	O	Servo IC power control. High: POWER ON, Low: POWER OFF
14	P31	SRQ	O	MECHA μ-COM transfer request on the communication between MASTER μ-COM and MECHA μ-COM. Request at ↓.
15	P32	LOAD	O	LOADING/EJECT Output for motor: 1 (LOAD), 0 (EJECT), 0 (STOP), 1 (BRAKE)
16	P33	EJECT	O	LOADING/EJECT Output for motor: 0 (LOAD), 1 (EJECT), 0 (STOP), 1 (BRAKE)
17	PWM0	LDON	O	Laser on/off output High: LASER OFF, Low: LASER ON
18	PWM1	LDPOWER	O	Laser power control Low: On low reflecting rate disc (MO), High: On high reflecting rate disc (CD).
19	AVSS			Ground for A/D convertor input. (0 V)
20	AVREF			Reference voltage input for A/D convertor. (5 V)
21	AN0	SW1	ADI	Loading start switch, eject end switch. Loading starts on ↑, Eject is end on ↓.
22	AN1	SW2	ADI	Loading end switch Loading is end on ↓.
23	AN2	SW3	ADI	(Not used) Open.
24	AN3	SW4	ADI	Disc reflecting rate detection switch. Detects from holes on the cartridge. Low: On high reflecting rate disc (CD), High: On low reflecting rate disc (MO).
25	AN4	TEMP	ADI	Detects the mechanism deck is high temperature or not. High: NORMAL, Low: HIGH TEMP
26	AN5			(Not used) Open.
27	AN6			(Not used) Open.
28	AN7			(Not used) Open.
29	RESET			Reset for μ-COM
30	VDD			Power for μ-COM
31	X2			For the system clock
32	X1			For the system clock
33	Vss			Ground for μ-COM
34	P00	RFSW1	O	DISC MODE High: On pit, Low: On groove

Pin No.	Port No.	Port Name	I/O	Description
35	P01	RFSW0	O	DISC MODE High: On CD, Low: On MO
36	P02	ASYSW	O	On playing back CD disc pit: Fixed to high. On playing back MO disc groove: High=Normal, Low=On track jump operation.
37	P03	AGCSW	O	High: Focusing starts, Low: Focusing is end.
38	P04	MIRRSW	O	On playing back CD disc pit: Fixed to low. On playing back MO disc groove: High=Normal, Low=On track jump operation and on the time from CLV, tracking, sled servo go on to starting is OK.
39	P05	DFCTSW	O	High: Focusing starts. Low: All servo (Focus, CLV, Tracking, sled) is on.
40	P06	SLO MUTE	O	MOTOR DRIVER POWER CONTROL "H": ON, "L": OFF
41	P07	IFRES		(Not used) Open.
42	P60	KI0	I	KEY SCAN input 0
43	P61	KI1	I	KEY SCAN input 1
44	P62	KI2	I	KEY SCAN input 2
45	P63	KI3	I	KEY SCAN input 3
46	P64	KO0	O	KEY SCAN output 0
47	P65	KO1	O	KEY SCAN output 1
48	P66	KO2	O	KEY SCAN output 2
49	P67	KO3	O	KEY SCAN output 3

	KI0	KI1	KI2	KI3
KO0	EJECT	STOP	PLAY	PAUSE
KO1	REV	CUE	AMS −	AMS+
KO2	MODE			LASER
KO3	FOCUS	TRACK	SLED −	SLED+

On pin ① is low「Pins ㊽, ㊼, ㊻ ⇨ DRAM remains.」
000=0M, 001=~0.5M, 010=~1.0M,
011=~1.5M, 100=~2.0M, 101=~2.5M,
110=~3.0M, 111=3.0M~

Pin No.	Port No.	Port Name	I/O	Description
50	P57	FOK	I	FOCUS OK High: FOCUS OK, Low: FOCUS NG
51	P56	ATT	O	CXD2527 ATTENUATION (− 12dB) High: ON, Low: OFF
52	P55	AEXEC	O	CXD2527 START High: START, Low: STOP
53	P54	CD/MO	I	Connected to CXA1381. CD/MO discrimination
54	P53	SENS	I	SENSE input from CXA1082 and CXD2525.
55	P52	LOCK	I	LOCK input from CXD2525. "H": CLV LOCK, "L": CLV UNLOCK
56	P51	GFS	I	GFS (Constant linear velocity) OK High: GFS OK, Low: GFS NG
57	P50	XINT	I	CXD2526 interruption. Detects ‾↓_ low level.
58	P47	MD2		Connected to MD2 terminal of CXD2525.
59	P46	DIRC	O	High: Detects TRACK JUMP TZC, Low: 1 TRACK JUMP end
60	P45	XRST	O	Reset the servo IC on ‾_↑‾.
61	P44	SORS	O	Reset ENSCOR
62	P43	SBMN		Connected to CXD2526 SBMN. "H": SUB DATA CONTROL, "L": MAIN DATA CONTROL
63	P42	WRMN	O	High: DRAM WRITE START, Low: DRAM WRITE STOP
64	P41	RCPB	O	REC/PB selection High: REC, Low: PB
65	P40	SCTX	O	CD-DA MODE SCOR input
66				(Not used) Open.
67	Vss			Ground for μ-COM
68	EA			5 V
69	P10	SCK	I	Clock for serial communication to servo IC.

Pin No.	Port No.	Port Name	I/O	Desription
70	P11	ARST	O	Reset output to CXD2527. Reset on ‾_↑‾
71	P12	SWDT	O	Write data for serial communication to servo IC.
72	P13	SRDT	O	Read data for serial communication to servo IC.
73	P14	XLAT	O	Latch for serial communication to servo IC.
74	P15	MDT	O	For digital filter (Not used). Open.
75	P16	MCK	O	For digital filter (Not used). Open.
76	P17	MLEN	O	For digital filter (Not used). Open.
77	VDD			Power for μ-COM
78	P70	8VPOWER		8 V system power supply. High: ON, Low: OFF
79	P71	MUTE		High: MUTE ON, Low: MUTE OFF
80				(Not used) Open.

MAIN BOARD IC504 (μPD75518GF) -090-3B9

<table>
<tr><th>Pin No.</th><th>Port No.</th><th>Port Name</th><th>I/O</th><th>Key Contens</th></tr>
<tr><td>1</td><td>AN0</td><td>KEY-IN0</td><td>ADI</td><td>Key input by A/D conversion no.0
<table>
<tr><th>VALUE (DENOMINATOR OFFH)</th><th>KEY CONTENTS</th></tr>
<tr><td>00H – 08H</td><td>FM(J)</td></tr>
<tr><td>09H – 1BH</td><td>AM(J)</td></tr>
<tr><td>1CH – 2AH</td><td>EJECT</td></tr>
<tr><td>2BH – 3AH</td><td>LEVEL+</td></tr>
<tr><td>3BH – 48H</td><td>SELECT</td></tr>
<tr><td>49H – 58H</td><td>SEEK+, AMS+</td></tr>
<tr><td>59H – 67H</td><td>SEEK –, AMS –</td></tr>
<tr><td>68H – 78H</td><td>PRESET+, DISC+</td></tr>
<tr><td>79H – 88H</td><td>PRESET –, DISC –</td></tr>
<tr><td>89H – 99H</td><td>MUTE</td></tr>
<tr><td>9AH – AAH</td><td>FILE</td></tr>
<tr><td>ABH – BAH</td><td>M.SCAN, BTM</td></tr>
<tr><td>BBH – CBH</td><td>SENS, SCROLL</td></tr>
<tr><td>CCH – DBH</td><td></td></tr>
<tr><td>DCH – EAH</td><td></td></tr>
<tr><td>EBH – F9H</td><td></td></tr>
</table></td></tr>
<tr><td>2</td><td>AVREF</td><td></td><td></td><td>Reference voltage input for A/D convertor input (5 V).</td></tr>
<tr><td>3</td><td>VDD</td><td></td><td></td><td>Power for μ-COM</td></tr>
<tr><td>4</td><td>VDD</td><td></td><td></td><td>Power for μ-COM</td></tr>
<tr><td>5</td><td>P113</td><td>KEY-ACTIVE</td><td>O</td><td>Power on/off switch for A/D buttons.
High: POWER ON, Low: POWER OFF</td></tr>
<tr><td>6</td><td>P112</td><td>P-ON</td><td>O</td><td>LED on/off switch for general keys on nose.
High: LED on, Low: LED off.</td></tr>
<tr><td>7</td><td>P111</td><td>ILL-ON</td><td>O</td><td>LED on/off switch for source keys on nose.
High: LED on, Low: LED off.</td></tr>
<tr><td>8</td><td>P110</td><td>COLOR</td><td>O</td><td>LED color select
High: GREEN, Low: AMBER</td></tr>
<tr><td>9</td><td>P103</td><td>MUTE</td><td>O</td><td>Head unit internal mute
High: On source selection or during stop, Low: During playback.</td></tr>
<tr><td>10</td><td>P102</td><td>AUX-MUTE</td><td>O</td><td>UNI-LINK slave unit mute
High: During internal slave playback or stop.
Low: During playback.</td></tr>
<tr><td>11</td><td>P101</td><td></td><td>O</td><td>(Not used) Open.</td></tr>
<tr><td>12</td><td>P100</td><td></td><td>O</td><td>(Not used) Open.</td></tr>
<tr><td>13</td><td>P93</td><td>ANT. REM</td><td>O</td><td>Output for power antenna. It is high in tuner and TV modes.
High: FM, AM, MW, LW, TV modes, Low: Other modes.</td></tr>
<tr><td>14</td><td>P92</td><td>MD-P-ON</td><td>O</td><td>MD board power on (Not used).
High: During MD playback or MD eject, Low: Other operation.</td></tr>
<tr><td>15</td><td>P91</td><td>MD2-ON</td><td>O</td><td>Wake up/sleep control for MECHA μ-COM.
High: MECHA μ-COM ACTIVE, Low: MECHA μ-COM SLEEP</td></tr>
<tr><td>16</td><td>P90</td><td>$\overline{\text{MD-RESET}}$</td><td>O</td><td>Reset for MECHA μ-COM.
Reset MECHA μ-COM at ¯|_|¯</td></tr>
<tr><td>17</td><td>SI1</td><td>MD-DATA. IN</td><td>I</td><td>DATA of the communication between MASTER μ-COM and MECHA μ-COM in.</td></tr>
<tr><td>18</td><td>SO1</td><td>MD-DATA. OUT</td><td>O</td><td>DATA of the communication between MASTER μ-COM and MECHA μ-COM out.</td></tr>
<tr><td>19</td><td>$\overline{\text{SCK1}}$</td><td>$\overline{\text{MD-CLK}}$</td><td>O</td><td>CLOCK of the communication between MASTER μ-COM and MECHA μ-COM out.</td></tr>
<tr><td>20</td><td>PPO</td><td>$\overline{\text{MD-CS}}$</td><td>O</td><td>MASTER μ-COM transfer request on the communication between MASTER μ-COM and MECHA μ-COM. Request at ¯|_.</td></tr>
<tr><td>21</td><td>P73</td><td>VOL-CE</td><td>O</td><td>Chip enable to E-volume (LC7537)</td></tr>
<tr><td>22</td><td>P72</td><td></td><td>O</td><td>(Not used) Open.</td></tr>
<tr><td>23</td><td>P71</td><td>VOL-CLK</td><td>O</td><td>Clock to E-volume</td></tr>
<tr><td>24</td><td>P70</td><td>VOL-DATA</td><td>O</td><td>Data to E-volume</td></tr>
</table>

Pin No.	Port No.	Port Name	I/O	Description
25	P63	8901-CE	O	Chip enable to digital audio receiver
26	P62	DIGITALRESET	O	Reset to digital audio receiver and DAC
27	P61	8901-CLK	O	Clock to digital audio receiver
28	P60	8901-DATA	O	Data to digital audio receiver
29	P53	DIGITAL MUTE-IN	I	Connected to ERROR terminal of LC8901. Raise up high MUTE terminal by level high input.
30	P52		I	(Not used) GND
31	P51		I	(Not used) GND
32	P50		I	(Not used) GND
33	Vss			Ground for μ-COM
34	P43	HAS LOUDNESS/ NOT HAVE LOUDNESS	I	Loudness function having or not select input. High: Has loudness. Low: Not have loudness.
35	P42		I	(Not used) GND
36	P41		I	(Not used) GND
37	P40		I	(Not used) GND
38	P33		O	(Not used) Open.
39	P32		O	(Not used) Open.
40	P31	DISK-IN. LED GFS (TEST)	O	Indicates there is MD cartridge in the mechanism deck or not. High: There is a cartridge. Low: There is not.
41	P30	SYNC	O	Sync signal for UNI-LINK
42	P23	$\overline{\text{SYSTEM-RESET}}$	O	Sync reset for UNI-LINK
43	P22	$\overline{\text{BUS ON}}$	O	Controls UNI-LINK bus activation High: BUS SLEEP, Low: BUS ACTIVE
44	P21	CLK OUT	O	Clock out for UNI-LINK
45	P20	BEEP	O	Beep out. When requesting beep out, rectangular wave is out.
46	P13	$\overline{\text{ACC-CHECK}}$	I	ACC SW in High: ACC OFF, Low: ACC ON
47	P12	KEY-ACK	I	Rises low to high by pushing KEY IN 0 or KEY IN 1 when KEY-ACTIVE is low. Usually high level is out when KEY-ACTIVE is high.
48	P11	C-SW	I	Mechanism deck cartridge in switch High: There is a cartridge, Low: There is not.
49	P10	SIRCS-IN	I	SIRCS input from remote controller
50	SI0	DATA IN	I	Data input from UNI-LINK
51	SO0	DATA OUT	O	Data output to UNI-LINK
52	SCK0	CLK IN	I	Clock output to UNI-LINK. Input from pin ㊹.
53	P00	B/U-CHECK	I	For back-up check High: BACK UP ON, Low: BACK UP OFF
54	Vss			Ground for μ-COM
55	XT1			SUB SYSTEM CLOCK
56	XT2			SUB SYSTEM CLOCK
57	IC			Connected to internally connected Vss.
58	X1			MAIN SYSTEM CLOCK
59	X2			MAIN SYSTEM CLOCK
60	$\overline{\text{RESET}}$			Reset for μ-COM

Pin No.	Port No.	Port Name	I/O	Description
61	P143		O	(Not used) Open.
62	P142	LCD-CE	O	Chip enable to LCD driver
63	P141	LCD-CLK	O	Clock to LCD driver
64	P140	LCD-DATA	O	Data to LCD driver
65	P133		O	(Not used) Open.
66	P132	$\overline{\text{TEL-MUTE}}$	I	Telephone mute input. Attenuate audio output − 20 dB by putting low level in.
67	P131	$\overline{\text{MD-SRQ}}$	I	MECHA μ-COM transfer request on the communication between MASTER μ-COM and MECHA μ-COM. Request at ⌐_.
68	P130	N-SW	I	Input there is nose or not. High: There is a nose, Low: There is not.
69	P123		O	(Not used) Open.
70	P122	SEL-A/D	O	ANALOG AUDIO/DIGITAL AUDIO SOURCE select High: DIGITAL, Low: ANALOG
71	P121	SEL-1	O	AUDIO SOURCE select 1: 0 / 1 / 0 / 1
72	P120	SEL-0	O	AUDIO SOURCE select 0: 0 / 0 / 0 / 1 (TUNER / AUX / MD / SLAVE (CD))
73	AVSS			Ground for A/D converter input
74	AN7		ADI	(Not used) GND
75	AN6	P-SEL. SW	ADI	Power select switch input High: POWER SEL ON, Low: POWER SEL OFF
76	AN5		ADI	(Not used) GND
77	AN4	DEST-SEL	ADI	The second and third source keys on right side of nose allocation input. J, U/CA, E − 0V FM, AM AE/AE6 − 5V FM/MW/LW, AF/TA
78	AN3		ADI	(Not used) GND
79	AN2		ADI	(Not used) GND
80	AN1	KEY-IN1	ADI	Key input by A/D conversion no. 1

Pins 71/72 source selection:

	TUNER	AUX	MD	SLAVE (CD)
AUDIO SOURCE select 1	0	1	0	1
AUDIO SOURCE select 0	0	0	0	1

Pin 80 key input table:

VALUE (DENOMINATOR OFFH)	KEY CONTENTS
00H − 08H	CD
09H − 1BH	MD
1CH − 2AH	OFF
2BH − 3AH	LEVEL −
3BH − 48H	DSPL
49H − 58H	1 INTRO
59H − 67H	2 REPERT
68H − 78H	3 SHUFFLE
79H − 88H	4 BANK
89H − 99H	5
9AH − AAH	6
ABH − BAH	
BBH − CBH	
CCH − DBH	
DCH − EAH	
EBH − F9H	

MAIN BOARD IC601 (μPD75116GF-G00-3BE)

Pin No.	Name	I/O	Description
1	–	–	Not used.
2	–	–	
3	–	–	(Connected to ground).
4	–	–	
5	–	–	
6	–	–	
7	RESET	–	Reset input
8	X2	–	Connected to ceramic oscillator (4.19 MHz).
9	X1	–	
10	PLL-DI	I	Data input for PLL IC
11	PLL-DO	O	Data output for PLL IC
12	PLL-CLK	O	Clock output for PLL IC
13	PLL-CE	O	Chip enable output for PLL IC
14	MS7	I	Mode select input
15	MS6	I	
16	MS5	I	
17	MS4	I	
18	MS3	I	
19	MS2	I	
20	MS1	I	
21	MS0	I	
22	RDS-D1	I	Not used.
23	$\overline{\text{RDS-D-Start}}$	I	Not used.
24	$\overline{\text{RDS-ERR}}$	I	Not used.
25	$\overline{\text{RDS-Receive}}$	I	Not used.
26	Vss	–	GND
27	–	–	(Connected to ground).
28	–	–	(Connected to ground).
29	RDS – CLK	I	Not used.
30	BUS-ON	I	Bus on input Recognizes interruption request flag (IREQ 0) when bus on/off detection interrupting and on μ-COM operation mode. When μ-COM is stop, this interruption is used for releasing stop mode. when the stop command effects, set interrupting enable, interruption request flag, and INTO edge detection mode register (IMO).
31	–	–	Not used. (Connected to Vss or VDD).
32	ST IN	I	STEREO input Low: Stereo. Goes low during putting out force monaural. Usually transfers "0" to display data.
33	Vsm (FM)	I	FM S meter voltage detection. Used for A/D conversion function during BTM.
34	Vsm (AM)	I	AM S meter voltage detection.
35	–	–	Not used. (Connected to Vss or VDD).
36	–	–	

Pin No.	Name	I/O	Description
37	–	–	Not used.
38	$\overline{\text{RDS-RESET}}$	O	Not used.
39	Request	O	Bus request output. For communication request. High: Requests.
40	LINK-OFF	O	Bus link off output High: Link off. Goes low during bus on. When setting link state in CLOCK STOP mode, output level continues low. When BACKUP is off, sets input state.
41	DATA. IN	I	Bus data input. Serial data input.
42	DATA. OUT	O	Bus data output. Serial data output.
43	CLK. IN	I	Bus clock out Serial clock input for bus communication. Clock goes out from IC504 during transferring on receiving clock sync. 8 bits.
44	B UP	I	BUCKUP detect input. Used for BACKUP detect or interruption. On μ-COM operation, recognizes BACKUP change by detecting rising edge and falling edge of interruption request flag (IRQ4). When the interruption doesn't effect, interruption enable flag (IE4) is inhibited. When μ-COM is stop, this interruption is used for releasing STOP mode.
45	–	–	
46	–	–	Not used.
47	–	–	
48	$\overline{\text{MONO}}$	O	Force monaural output Selects stereo mode high level output or force monaural mode low level. When setting to AM band, MS4 (Mode select pin) "1" is only effective. During TA interrupting on alarming, force monaural mode low level goes out in spite of mode setting.
49	–	–	Not used.
50	–	–	
51	$\overline{\text{FM-FE-ON}}$	O	FM power supply control output. Low: FM
52	$\overline{\text{AE-FE-ON}}$	O	AM power supply control output. Low: AM
53	MUTE	O	Mute output
54	–	–	
55	–	–	Not used.
56	–	–	
57	VDD	–	Power supply
58	VDD	–	
59	SD	I/O	SD input Set the stop level of seek, auto-memory, and scan. Low: AM receiving (Mute off).
60	–	–	Not used.
61	ROM CLK	O	EEPROM clock output
62	ROM DATA	I/O	EEPROM data input/output
63	–	–	Not used.
64	–	–	

MAIN BOARD IC901 (LC8901)

Pin No.	Name	I/O	Description
1	DIN5	I	Data input
2	DIN6	I	Data input
3	DOUT1	O	Input EIAJ data through output
4	DOUT2	O	Input EIAJ data through output
5	RC1	I	For RC oscillator making clock for misclock detection of PLL.
6	RC2	O	
7	LPF	I	High: LPF time constant change, Low: Fixed.
8	STOP	I	High: Stops VCO, Low: Normally.
9	TEST1	I	For test (normally low)
10	TEST2	I	For test (normally low)
11	DVDD		Digital power supply
12	AVDD		Analogue power supply
13	R	I	For adjusting VCO oscillating band width
14	AGND		Analogue ground
15	VIN	I	For adjusting VCO self-oscillating
16	VCO	O	For PLL LPF
17	DGND		Digital ground
18	CLK	I	Clock mode select High: 512 Fs, Low: 384 Fs
19	XSYS	I	Crystal mode set. High: Crystal mode.
20	XIN1	I	Crystal oscillator. When PLL sync. demodulating, stops oscillating.
21	XIN2	O	
22	DVDD		Digital power supply
23	LOCK	O	High: PLL locks, Low: PLL unlocks.
24	ERROR	O	Error mute signal output
25	FS256	O	256 Fs clock output
26	CLKOUT	O	VCO oscillation or Crystal oscillation output.
27	EMPHA	O	High: There is emphasis, Low: There is not.
28	DGND		Digital ground
29	BCLK	O	Bit clock output
30	DATAOUT	O	Audio data output
31	LRCK	O	L/R clock output
32	SUB1	O	Sampling frequency output
33	SUB2	O	Sampling frequency output
34	DO	O	μ-COM interface output
35	DI	I	μ-COM interface input
36	CE	I	μ-COM interface chip enable input
37	CL	I	μ-COM interface clock input
38	XMODE	I	Starts PLL operation after power on
39	DVDD		Digital power supply
40	DIN1	I	Amplifier built-in data input

Pin No.	Name	I/O	Description
41	DIN2	I	Amplifier built-in data input
42	DIN3	I	Amplifier built-in data input
43	DIN4	I	Amplifier built-in data input
44	DGNC		Digital ground

MAIN BOARD IC902 (AK4328)

Pin No.	Name	I/O	Description
1	AGND1	–	Analogue ground
2	AOUTL	O	Lch analogue out, when putting in full scale, output is typ ± 2 Vp-p.
3	VA+	–	Positive power supply, +5 V for analogue
4	AGND2	–	Analogue ground
5	VA –	–	Negative power supply, – 5 V for analogue
6	CMPO	O	Comparator output. Used for offset calibration. Connected to CMPI pin.
7	NC	–	Not connected. Open.
8	CMPI	I	Comparator input. Used for offset calibration. Connected to CMPO pin.
9	$\overline{RST}$	I	Reset/Calibration When making this low, filter and modulator are reset. After this, making high, offset calibration starts. 1024L/R clock is used for offset calibration, while this time, analogue output is connected to analogue ground internally.
10	TST	I	Test (Pull-down pin) Open or connect it to digital ground.
11	CKS	I	Clock select. Selects clock frequency feeding to XTI pin. "L": CLK=256 fs (12.288 MHz @fs=48 kHz) "H": CLK=284 fs (18.432 MHz @fs=48 kHz)
12	DIF1	I	Dital input format (Pull-down pin) Can select four kinds of input format.
13	DIF0		
14	XTI	I	Clock input Connect crystal oscillator between XTO pin and this pin or feed external CMOS clock into XTI pin. Clock frequency is selected by CKS pin.
15	XTO	O	Crystal oscillator output When using crystal oscillator, connect it to XTI pin. When using external clock, open this pin.
16	VD+	–	Positive power supply +5 V for digital
17	DGND	–	Dgital ground
18	SDATA	I	Serial data input Feed 16/18 bit serial data 2's complementally from MSB.
19	BICK	I	Serial bit clock Clock for latching serial data. Latching polarity is different in data input format.
20	LRCK	I	L/R clock Selects channels of feeding serial data.
21	CALO	O	Calibration output Used for offset calibration. Connected to CALI pin.
22	ACKO	O	Analogue clock output. 128fs clock out. Connected to ACKI pin.
23	NC	–	Not connected. Open.
24	ACKI	I	Analogue clock input Analogue section master clock input. Feed input word rate 128 times (128 fs) clock. Connected to ACKO pin.
25	AGND3	–	Analogue ground
26	AOUTR	O	Rch analogue out When putting in full scale, output is typ ± 2Vp-p.
27	CALI	I	Calibration input Used for offset calibration. Connected to CALO pin.
28	VREF –	O	Reference voltage output, – 3.68 V. Usually connect a 10 μF or more electrolytic capacitor and a 0.1 μF ceramic capacitor parallel to analogue ground.

2-2. KEYBOARD BLOCK DIAGRAM

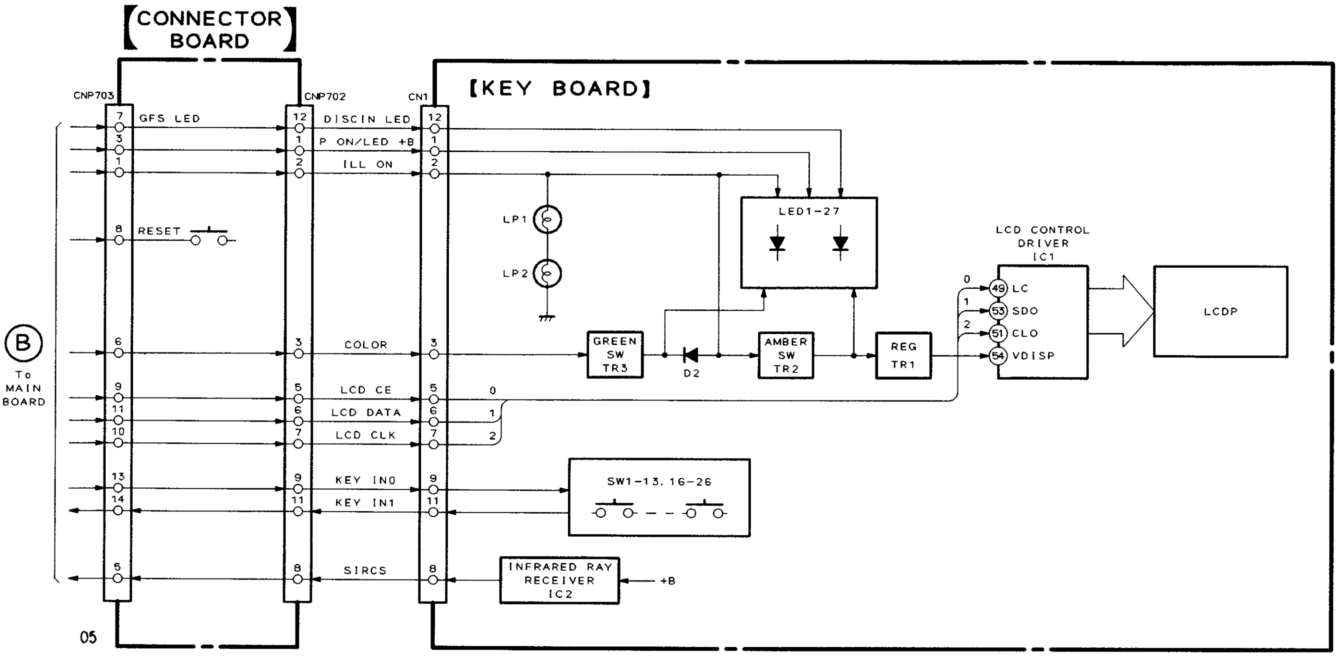

2-3. MD SECTION BLOCK DIAGRAM

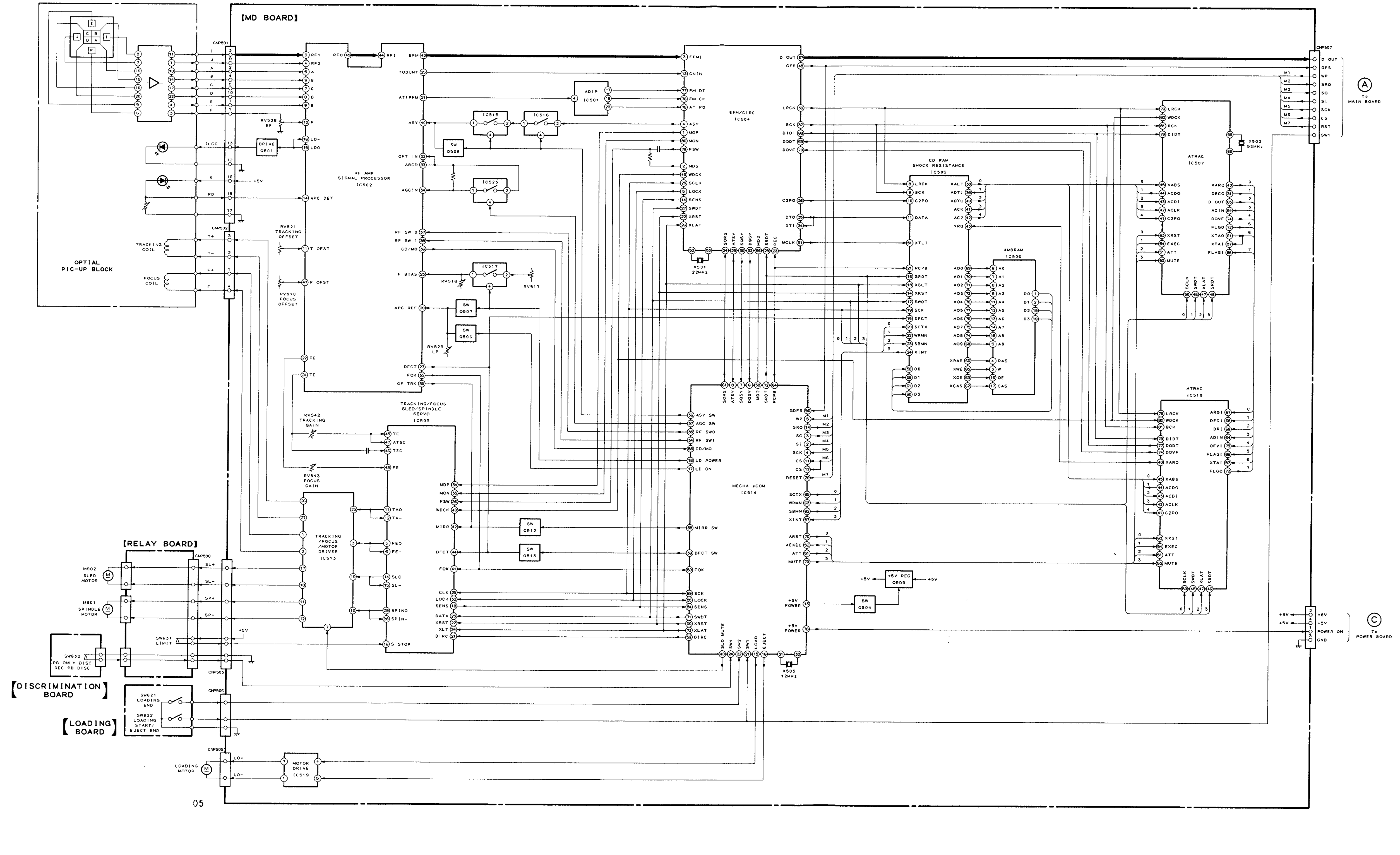

2-4. MAIN SECTION BLOCK DIAGRAM

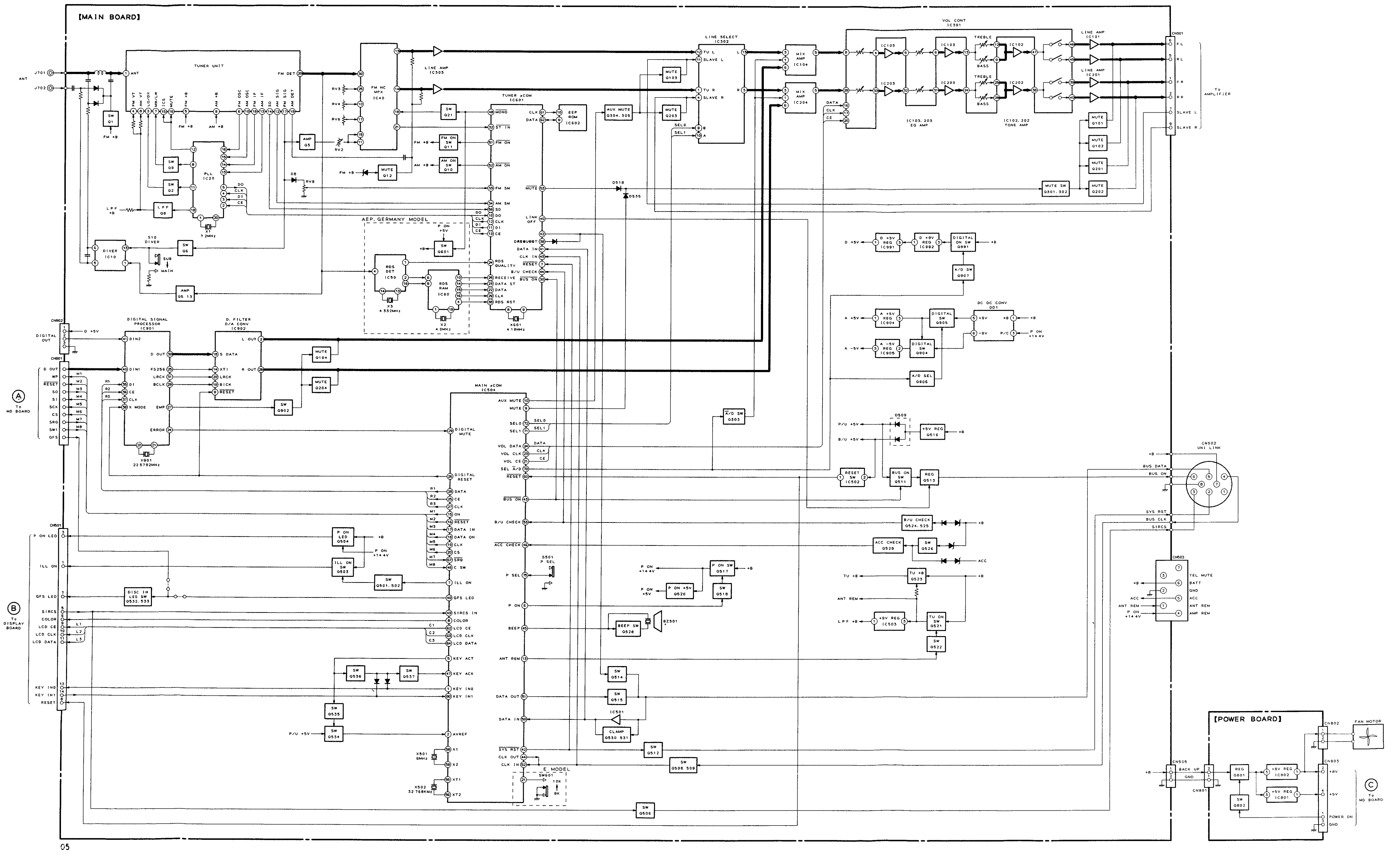

- **Main Section Waveforms**

㉖ IC901 ⑳ 20mV/DIV 5 μs/DIV

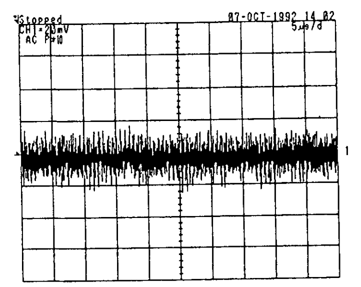

㉛ IC504 ㊺ 1V/DIV 10 μs/DIV

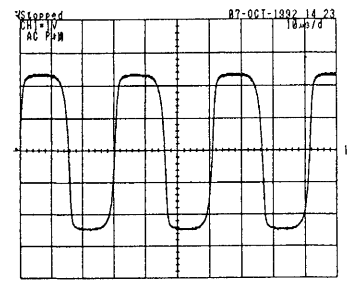

㉗ IC901 ㉑ 20mV/DIV 5 μs/DIV

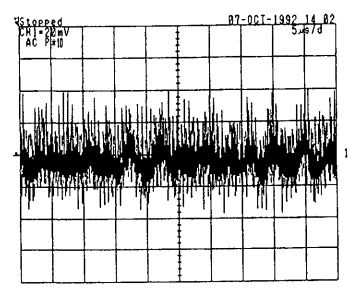

㉜ IC504 ㊾ 1V/DIV 50ns/DIV

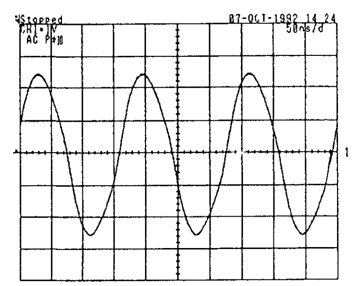

㉘ IC901 ㊵ 20mV/DIV 2 μs/DIV

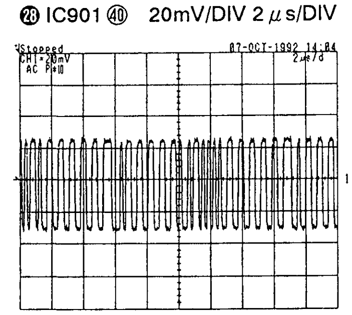

㉝ IC601 ⑧ 1V/DIV 100ns/DIV

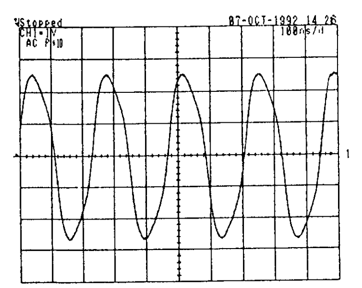

㉙ IC901 ㉙ 2V/DIV 10 μs/DIV

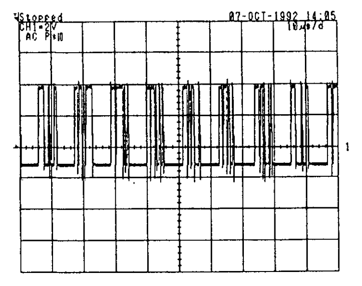

㉞ IC601 ⑨ 1V/DIV 100ns/DIV

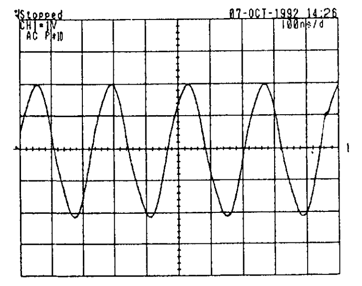

㉚ IC902 ⑳ 2V/DIV 10 μs/DIV

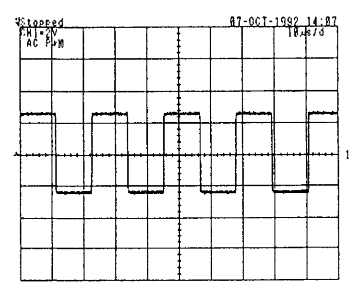

㉟ IC20 ① 1V/DIV 50ns/DIV

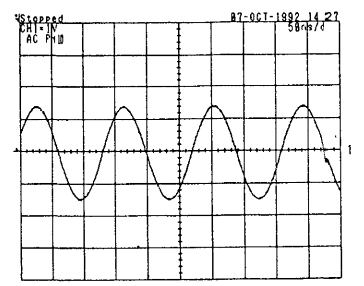

2-5. MD SERVO SECTION PRINTED WIRING BOARD

• **Semiconductor Location**

Ref. No.	Location	Ref. No.	Location
Q501	G-26	IC504	I-31
Q504	D-27	IC505	F-29
Q505	C-27	IC506	G-14
Q506	G-25	IC507	F-31
Q507	G-25	IC510	D-31
Q508	H-25	IC513	F-20
Q512	I-27	IC514	I-28
Q513	I-27	IC515	H-24
		IC516	J-31
IC501	I-24	IC517	H-22
IC502	H-25	IC519	C-25
IC503	E-24	IC523	I-24

2-6. MD SERVO SECTION SCHEMATIC DIAGRAM • See page 55 for IC Block Diagrams.

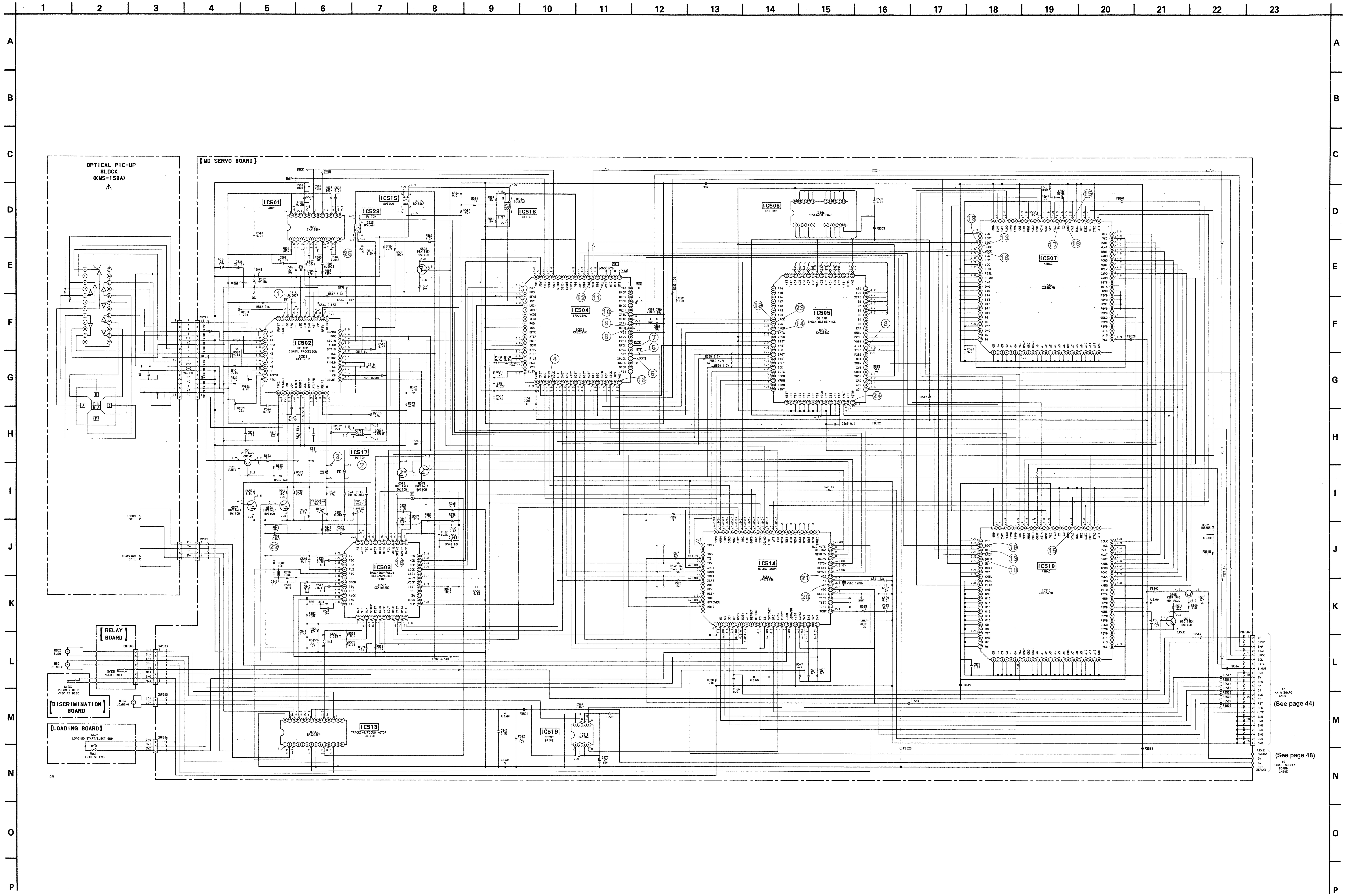

• MD Servo Board Waveforms

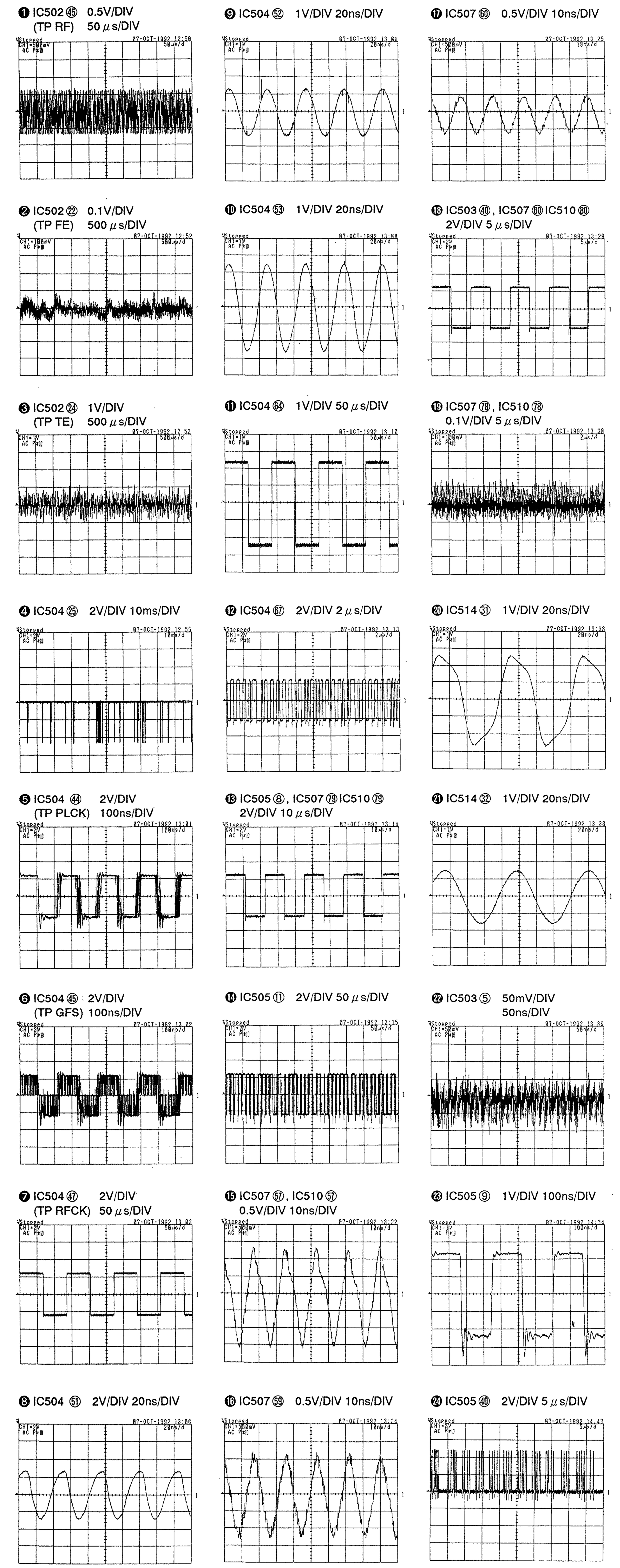

25 IC501 11 0.5V/DIV 1ms/DIV

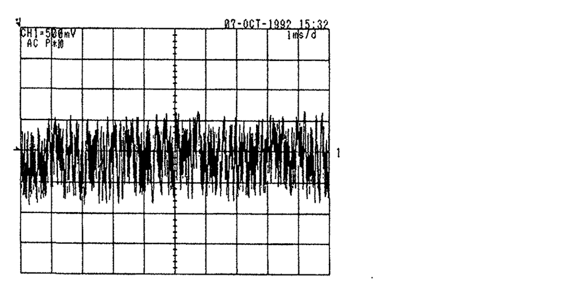

Note on Schematic Diagram:

- All capacitors are in μF unless otherwise noted. pF: μμF 50 WV or less are not indicated except for electrolytics and tantalums.
- All resistors are in Ω and ¼ W or less unless otherwise specified.
- △ : internal component.

Note:	Note:
The components identified by mark ⚠ or dotted line with mark ⚠ are critical for safety. Replace only with part number specified.	Les composants identifiés par une marque ⚠ sont critiques pour la sécurité. Ne les remplacer que par une pièce portant le numéro spécifié.

- ▬▬ : B + Line.
- ▬ ▬ ▬ : B – Line.
- Power voltage is dc 14.4 V and fed with regulated dc power supply from CN503 on Main Board.
- Voltages and waveforms are dc with respect to ground under no-signal (detuned) conditions.
  no mark : MD PB/Common
  (   ) : MD stop
  《   》: FM.
- Voltages are taken with a VOM (10 MΩ/V). Voltage variations may be noted due to normal production tolerances.
- Circled numbers refer to waveforms.
- Signal path.
  ⇨ : FM
  ⇨ : MD

Note on Printed Wiring Board:

- ○—— : parts extracted from the component side.
- ● : Through hole.
- ░░ : Pattern of the rear side.
- ░░ : Pattern from the side which enables seeing.

(The other layers' patterns are not indicated.)

Caution:	
Pattern face side: (Conductor Side)	Parts on the pattern face side seen from the pattern face are indicated.
Parts face side: (Component Side)	Parts on the parts face side seen from the parts face are indicated.

2-7. MAIN SECTION SCHEMATIC DIAGRAM • See page 33 for Waveforms and page 55 for IC Block Diagrams.

*DESTINATION

	JR601	JR602	JR603	JR604	JR605	JR606	JR607	JR608	JR609	JR610	JR611	R603	R604	R605	R606	R607	SW601
MDX-U1 (US) (CND)	O	O	O	O	O	O	O	O	O	O	O	X	X	X	X	X	X
MDX-U1RDS (AEP)	X	X	X	X	O	X	X	X	X	X	X	O	O	O	O	X	X
MDX-U1RDS (G)	X	X	X	X	O	X	X	X	X	X	X	O	O	O	O	X	X
MDX-U1 (E)	X	O	O	X	O	O	O	O	O	O	O	O	X	X	O	X	O

	R531	D541	D542	C542	D602	Q601	R574	C55 C56	R50 R51	R70 R80	R99	R128 R228	IC602	TU10
MDX-U1 (US) (CND)	O	O	O	O	X	X	O	0.027	82K	62K	10K	1.2K	X24C041	1-693-045-11
MDX-U1RDS (AEP)	O	O	O	O	O	O	X	0.018	82K	56K	47K	820	X24C161	1-693-046-11
MDX-U1RDS (G)	O	O	O	O	O	O	X	0.018	100K	47K	47K	680	X24C161	1-693-046-11
MDX-U1 (E)	O	O	O	O	X	X	O	0.018	82K	56K	10K	820	X24C041	1-693-045-11

• Voltages and waveforms are dc with respect to ground under no-signal (detuned) conditions.
no mark : FM/Common
( ) : MD stop
《 》: MD PB
[ ] : AM

• See page 39 for other notes.

• Semiconductor Location

Ref. No.	Location	Ref. No.	Location
D1	E-26	IC601	I-8
D2	E-2	IC602	I-7
D4	I-28	IC901	E-11
D7	G-24	IC902	G-10
D8	H-1	IC904	D-18
D101	E-21	IC905	B-18
D201	H-20	IC991	D-18
D301	E-20	IC992	C-19
D302	H-22		
D501	D-13	Q1	F-3
D502	D-17	Q2	F-4
D503	B-17	Q3	I-1
D504	C-16	Q5	E-4
D505	G-13	Q6	G-28
D506	H-10	Q8	F-26
D507	H-11	Q9	G-26
D508	I-19	Q10	F-5
D509	I-13	Q11	F-4
D510	E-16	Q12	G-24
D511	C-17	Q13	E-4
D512	E-8	Q21	H-23
D513	C-17	Q101	D-24
D514	C-1	Q102	D-23
D515	E-12	Q103	G-23
D516	B-26	Q104	G-20
D517	C-27	Q201	D-22
D518	H-20	Q202	D-23
D519	K-16	Q203	F-23
D520	B-17	Q204	F-20
D521	C-16	Q301	E-9
D522	K-3	Q302	E-10
D523	K-20	Q303	J-18
D524	K-20	Q304	H-21
D255	J-20	Q305	H-21
D526	K-19	Q501	D-18
D527	K-19	Q502	D-18
D528	K-17	Q503	C-13
D529	K-18	Q504	C-12
D530	K-17	Q506	G-14
D531	K-17	Q508	H-19
D532	K-12	Q509	I-19
D533	J-12	Q511	H-10
D534	K-16	Q512	H-10
D535	G-17	Q513	F-13
D536	C-26	Q514	H-11
D537	C-26	Q515	H-11
D538	E-12	Q516	D-17
D539	K-11	Q517	D-8
D540	K-11	Q518	C-16
D551	K-20	Q520	E-9
D601	J-9	Q521	D-9
D602	F-4	Q522	D-16
D905	D-19	Q523	C-12
		Q524	E-17
IC10	E-3	Q525	F-17
IC20	G-3	Q526	B-25
IC40	H-4	Q528	I-15
IC101	E-6	Q529	C-25
IC102	G-22	Q530	I-10
IC103	F-23	Q531	I-10
IC104	G-9	Q532	J-10
IC201	E-7	Q533	J-9
IC202	G-22	Q534	J-12
IC203	F-21	Q535	J-12
IC204	F-9	Q536	K-12
IC301	F-7	Q537	K-13
IC302	H-7	Q904	B-19
IC303	H-21	Q905	D-20
IC501	H-10	Q906	D-20
IC502	K-16	Q907	E-17
IC503	E-19	Q991	D-9
IC504	I-11	Q992	F-20

2-8. MAIN SECTION PRINTED WIRING BOARDS

- **Semiconductor Lead Layouts**

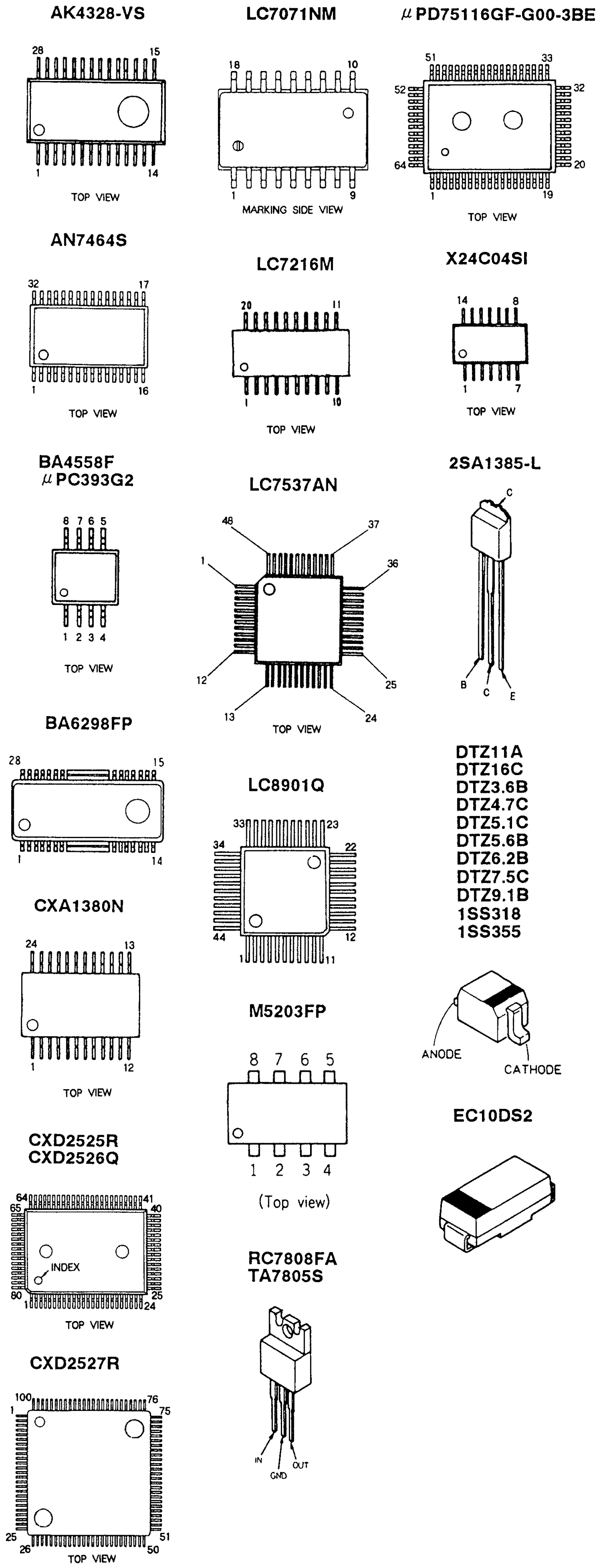

- **IC Block Diagrams**

MD SERVO BOARD
IC502 CXA1381R

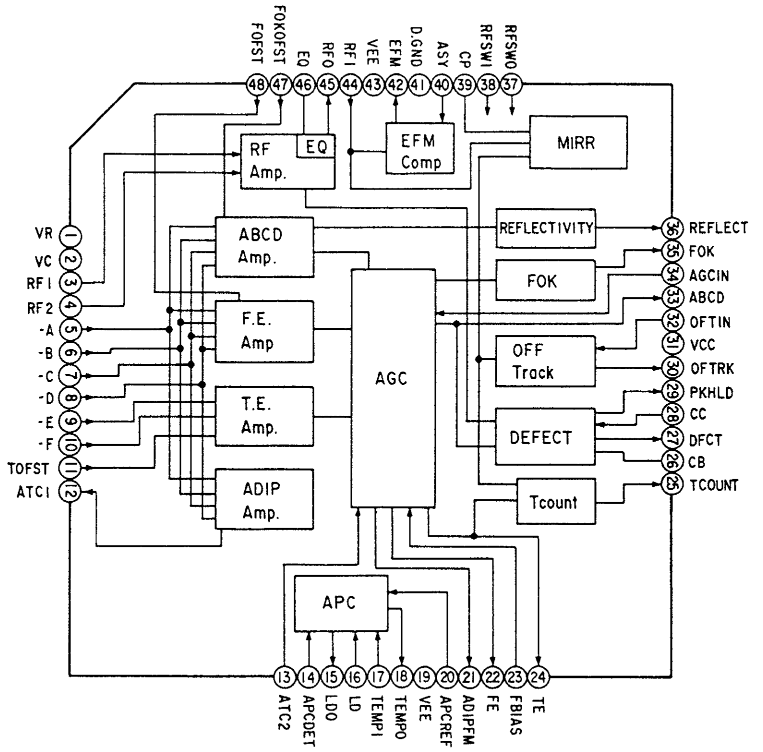

MD SERVO BOARD
IC503 CXA1082BQ

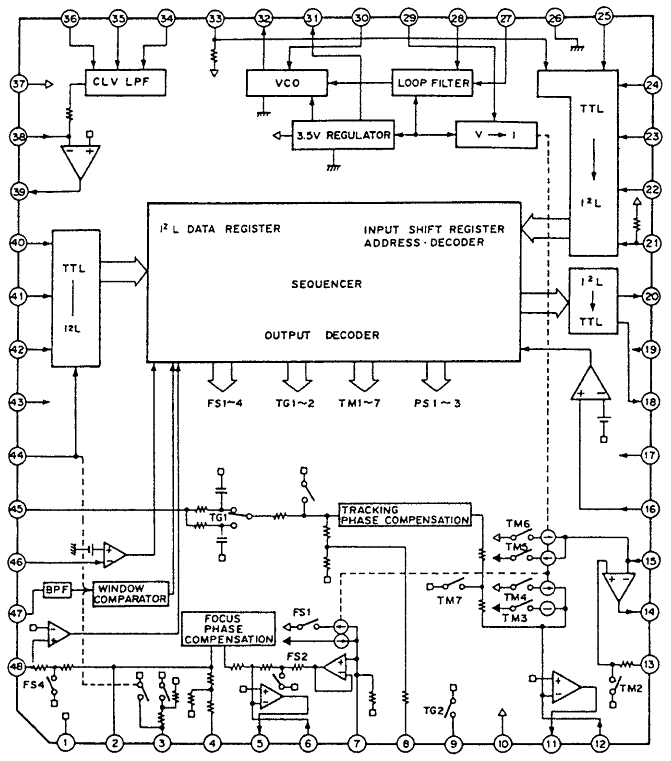

MD SERVO BOARD
IC505 CXD2526Q

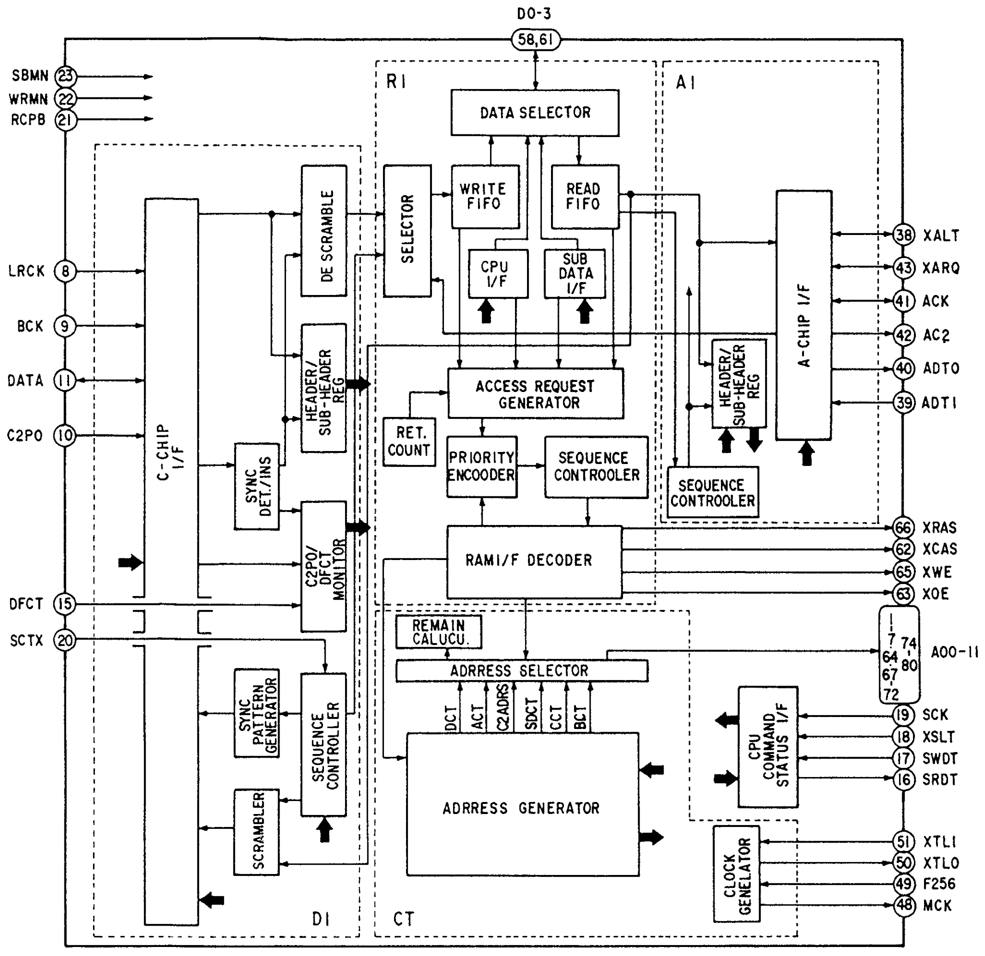

MD SERVO BOARD
IC507, 510 CXD2527R

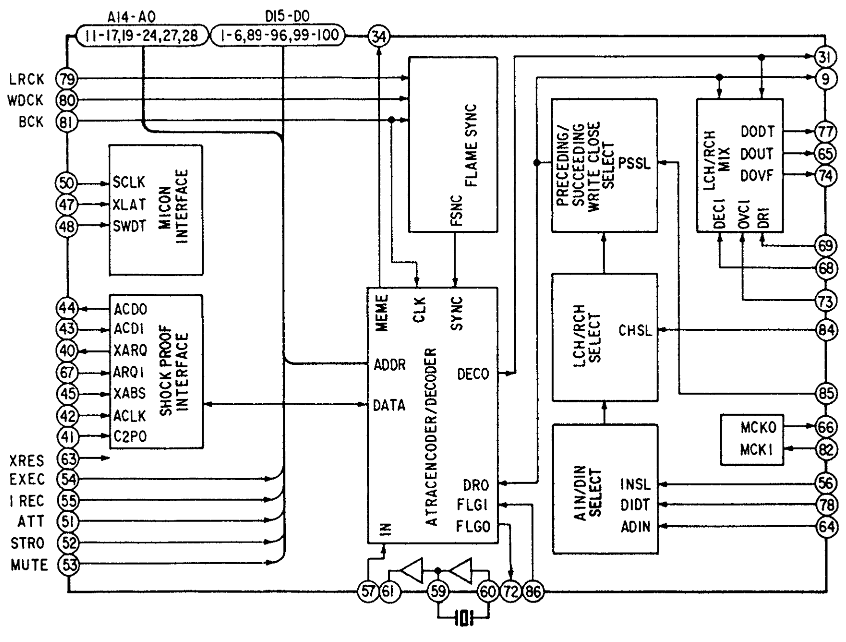

MD SERVO BOARD
IC513 BA6298FP

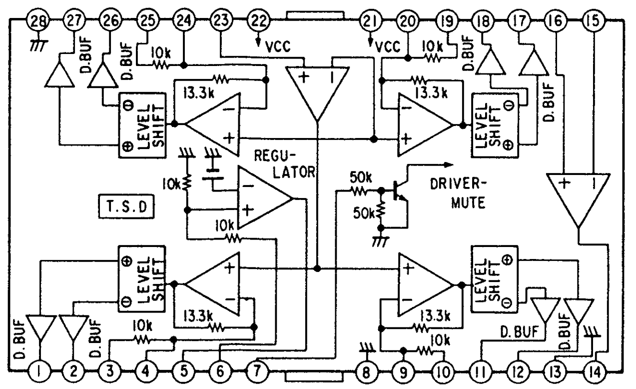

MD SERVO BOARD
IC519 BA6287F

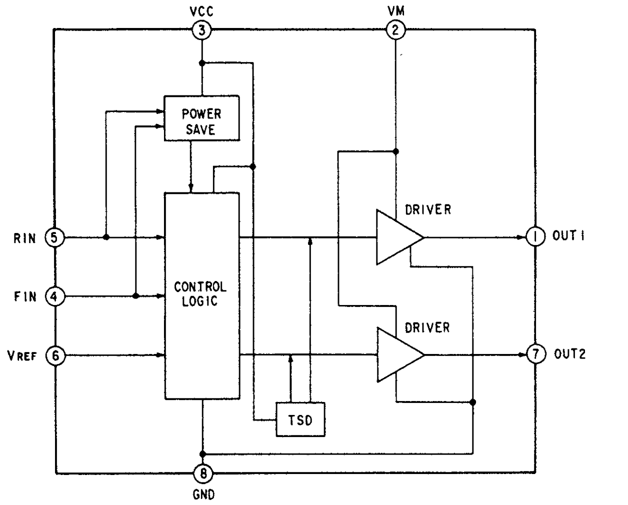

MAIN BOARD
IC40 AN7464S

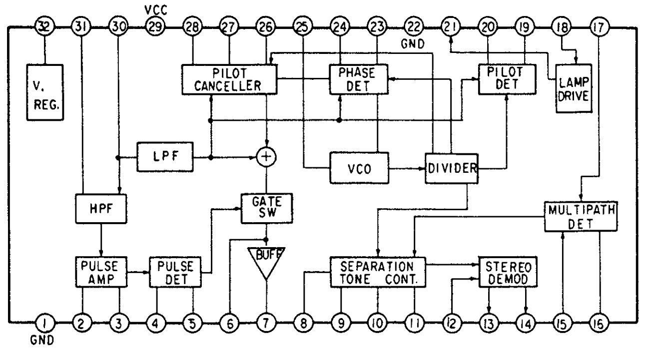

MAIN BOARD
IC104 M5203FP

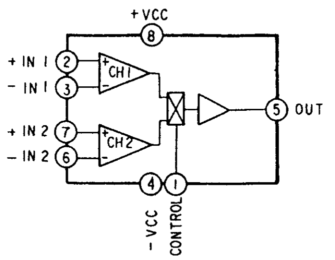

SECTION 3
EXPLODED VIEWS

NOTE:

- -XX and -X mean standardized parts, so they may have some difference from the original one.
- Abbreviation
  CND: Canadian Model
  G: Germany Model
- Items marked "*" are not stocked since they are seldom required for routine service. Some delay should be anticipated when ordering these items.
- The mechanical parts with no reference number in the exploded views are not supplied.
- Hardware (# mark) list is given in the last of this parts list.

The components identified by mark ⚠ or dotted line with mark ⚠ are critical for safety. Replace only with part number specified.
Les composants identifiés par une marque ⚠ sont critiques pour la sécurité. Ne les remplacer que par une pièce portant le neméro spécifié.

(1) COVER, CHASSIS SECTION

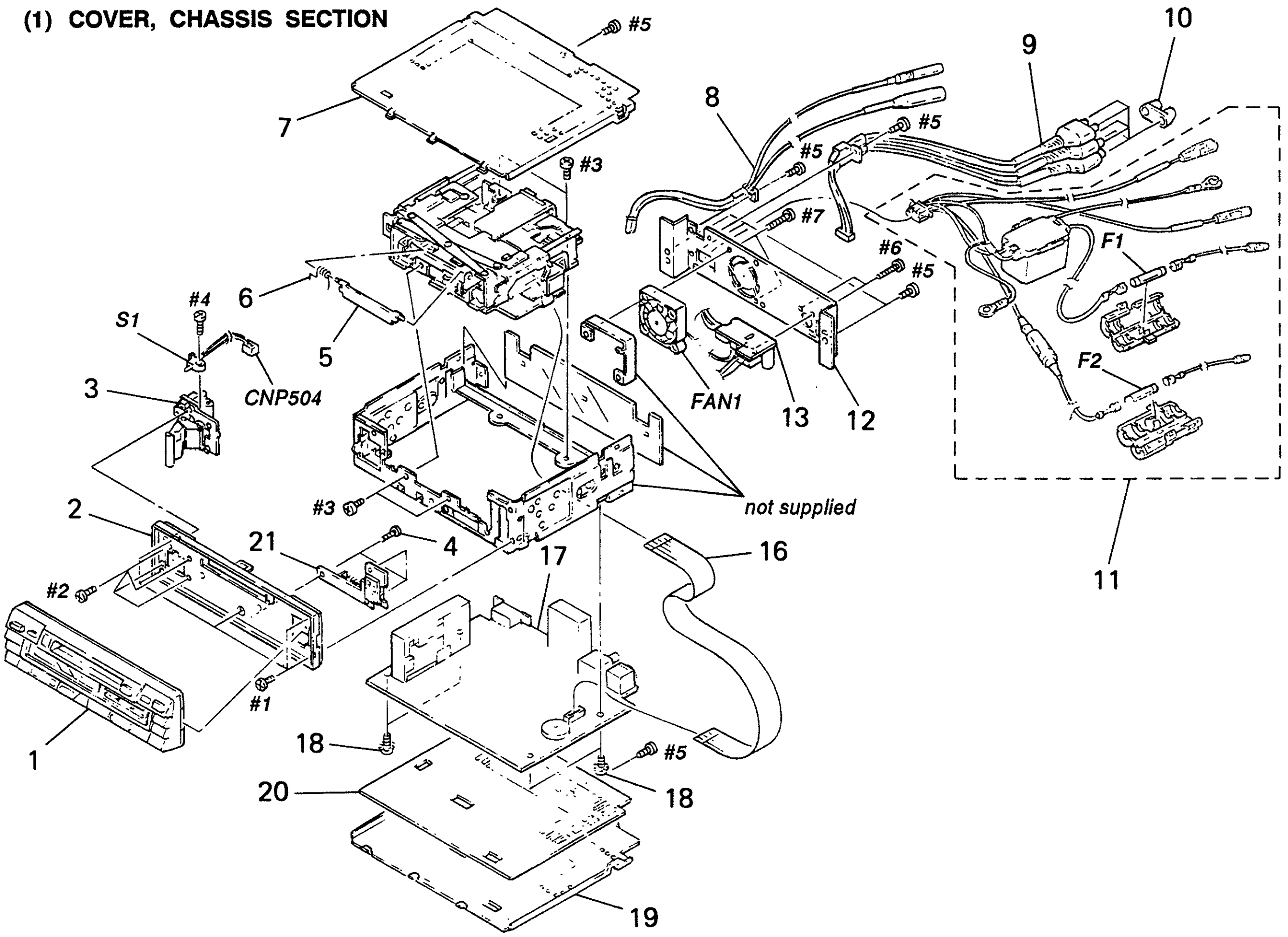

Ref. No.	Part No.	Description	Remark
1	A-3252-548-A	PANEL (FRONT) COMPLETE ASSY (US, CND, E)	
1	A-3252-575-A	PANEL (FRONT) COMPLETE ASSY (AEP, G)	
2	3-384-514-01	PANEL (SUB)	
3	X-3365-855-1	HOLDER (LEVER) ASSY	
5	3-384-525-01	DOOR (HOLDER)	
6	3-384-527-01	SPRING (DOOR)	
* 7	3-384-515-11	COVER	
8	1-690-946-11	CORD (WITH CONNECTOR) (ANT)	
9	1-696-624-11	CORD (WITH CONNECTOR) (AUDIO)	
10	3-339-410-01	COVER (2), PIN JACK	
11	1-696-623-11	CORD (WITH CONNECTOR)	
* 12	X-3365-853-1	PANEL ASSY, BACK	
* 13	1-645-958-12	POWER BOARD	
16	1-646-321-11	PC BOARD, FLEXIBLE (E)	
16	1-646-321-21	PC BOARD, FLEXIBLE (US, CND, AEP, G)	
* 17	A-3295-301-A	MAIN BOARD, COMPLETE (AEP)	
* 17	A-3295-302-A	MAIN BOARD, COMPLETE (G)	
* 17	A-3295-303-A	MAIN BOARD, COMPLETE (US, CND)	
* 17	A-3295-304-A	MAIN BOARD, COMPLETE (E)	
18	3-376-464-11	SCREW (+PTT 2.6X6), GROUND POINT	
* 19	3-384-515-01	COVER	
* 20	3-384-513-01	SHEET, INSULATING	
* 21	1-645-957-11	CONNECTOR BOARD	
* CNP504	1-563-470-11	HOUSING, CONNECTOR 2P	
F1	1-532-419-11	FUSE, GLASS TUBE 3.15A	
F2	1-532-414-11	FUSE, GLASS TUBE 1A	
FAN1	1-541-973-11	MOTOR (FAN)	
S1	1-570-771-11	SWITCH	

(2) FRONT PANEL SECTION

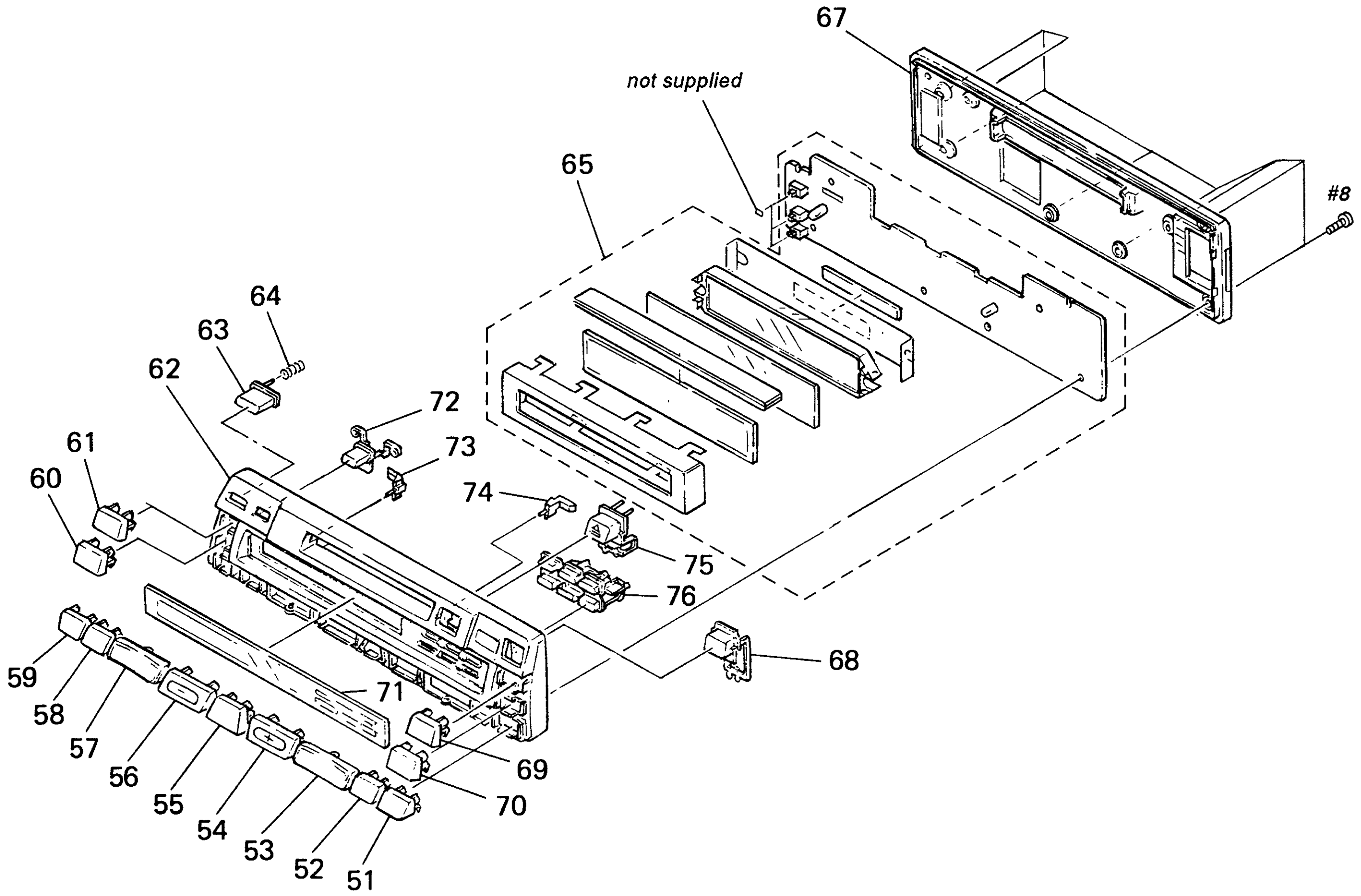

Ref. No.	Part No.	Description	Remark
51	3-384-501-01	BUTTON (CD)	
52	3-384-500-01	BUTTON (BTM)	
53	3-384-499-01	BUTTON (DISC)	
54	3-384-498-01	BUTTON (+)	
55	3-384-497-01	BUTTON (SEL)	
56	3-384-496-01	BUTTON (-)	
57	3-384-495-01	BUTTON (AMS)	
58	3-384-494-01	BUTTON (FILE)	
59	3-384-493-01	BUTTON (MUTE)	
60	3-384-490-31	BUTTON (A)	
61	3-384-490-11	BUTTON (A) (AEP, G)	
61	3-384-490-21	BUTTON (A) (US, CND, E)	
62	3-384-491-01	PANEL (FRONT)	
63	3-384-502-01	BUTTON (REL)	
64	3-573-461-00	SPRING, COMPRESSION	
65	1-466-812-11	KEY BOARD UNIT	
67	3-384-520-01	PANEL (REAR)	
68	3-384-510-01	BUTTON (MD)	
69	3-384-492-11	BUTTON (B) (AEP, G)	
69	3-384-492-21	BUTTON (B) (US, CND, E)	
70	3-384-492-31	BUTTON (B)	
71	3-384-505-01	PLATE, INDICATION	
72	3-384-503-01	BUTTON (OFF)	
73	3-384-506-01	PLATE (L), LIGHT GUIDE	
74	3-384-512-01	PLATE (R), LIGHT GUIDE	
75	3-384-504-01	BUTTON (EJECT)	
76	3-384-521-01	BUTTON (6 GANG)	

(3) MD SECTION-1

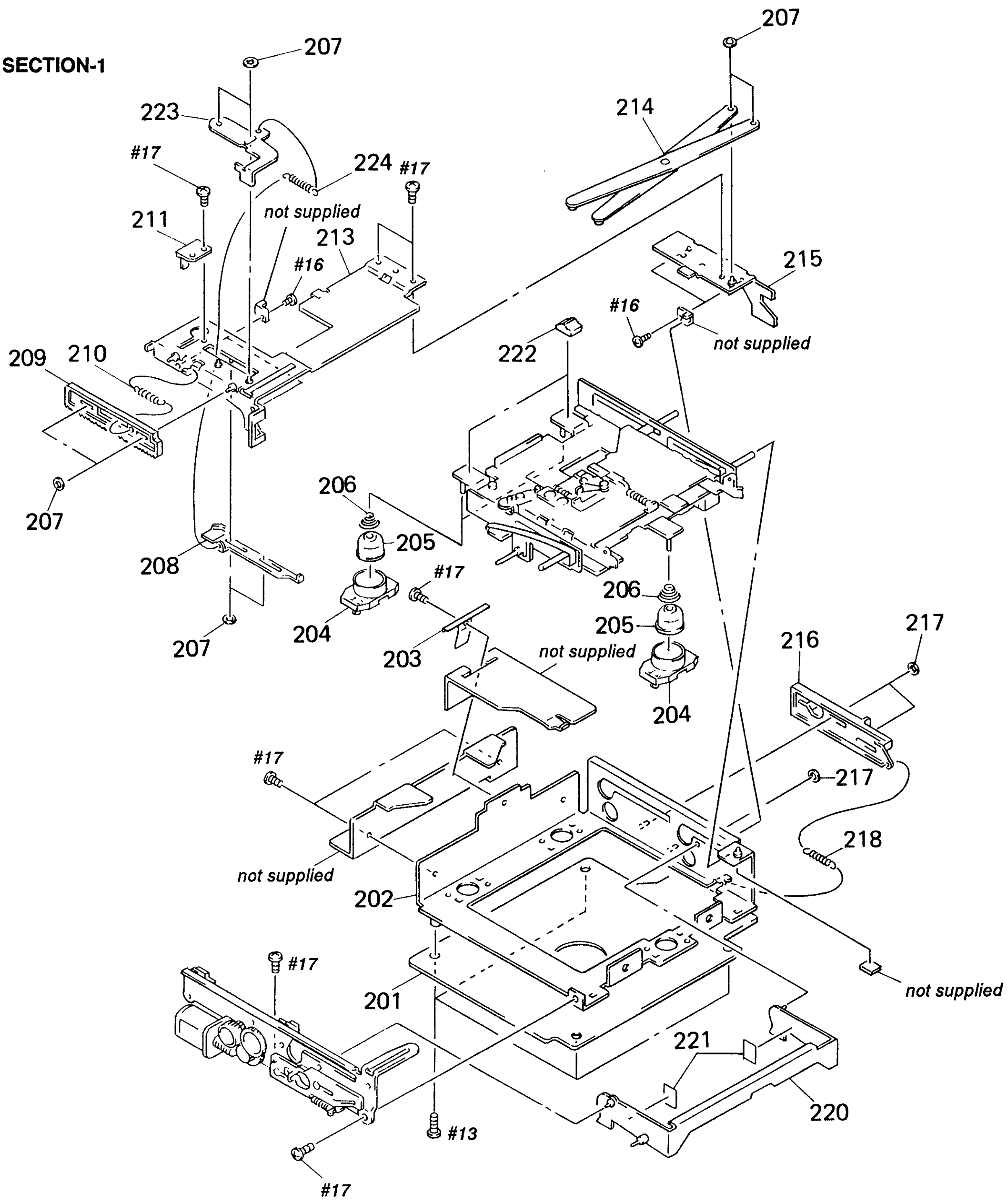

Ref. No.	Part No.	Description	Remark
* 201	A-3222-496-A	MD BOARD, COMPLETE	
* 202	X-3365-841-1	CHASSIS ASSY, MD	
* 203	3-384-423-01	SPRING (LL)	
204	3-384-483-01	DAMPER (NKZ)	
* 205	3-384-484-01	COVER (NKZ)	
206	3-384-456-01	SPRING (FL), CONE COIL	
207	3-573-936-00	STOPPER, REEL	
208	3-384-424-01	SLIDER (CL)	
209	3-384-442-01	RACK	
210	3-365-330-01	SPRING, TENSION	
* 211	3-384-426-01	LEVER (SW)	
* 213	X-3365-838-1	LOADER (L) ASSY	
214	X-3365-840-1	LEVER (X) ASSY	
* 215	X-3365-837-1	LOADER (R) ASSY	
216	3-384-438-01	LEVER (LOCK R)	
217	3-377-719-01	WASHER, POLYETHYLENE	
218	3-567-110-00	SPRING, TENSION	
* 220	X-3365-842-1	SHUTTER ASSY	
221	3-348-750-01	CUSHION (DAMPER)	
* 223	3-385-638-01	LEVER (RT)	
224	3-376-341-01	SPRING, TENSION	

Note:	Note:
The components identified by mark ⚠ or dotted line with mark ⚠ are critical for safety. Replace only with part number specified.	Les composants identifiés par une marque ⚠ sont critiques pour la sécurité. Ne les remplacer que par une pièce portant le neméro spécifié.

(4) MD SECTION-2

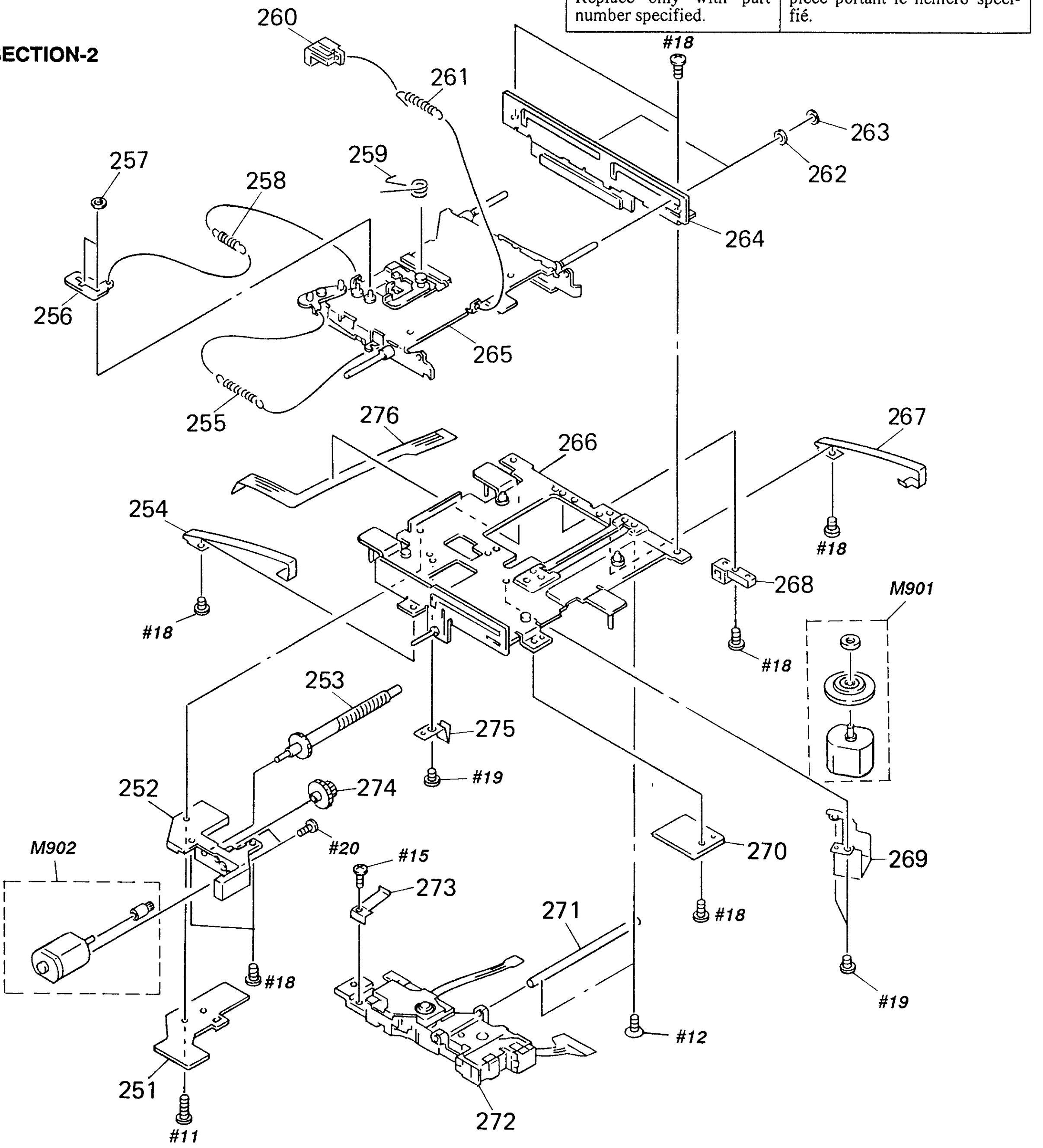

Ref. No.	Part No.	Description	Remark
* 251	1-646-323-11	RELAY BOARD	
252	X-3365-843-1	HOLDER (SL) ASSY	
253	X-3365-846-1	SHAFT (FEED) ASSY	
254	3-384-466-01	SPRING (CHL)	
* 256	3-384-418-01	JOINT	
257	3-311-815-11	WASHER, POLYETHYLENE	
258	3-307-378-00	SPRING, TENSION	
259	3-384-489-01	SPRING (EJS)	
260	3-384-434-01	LEVER (EJ)	
261	3-384-457-01	SPRING, TENSION	
262	3-738-212-11	RETAINER, THRUST, REEL TABLE	
263	3-385-409-01	WASHER, POLYETHYLENE	
* 264	X-3365-847-1	CHASSIS (R) ASSY	
* 265	X-3365-839-1	HOLDER ASSY	
* 266	X-3365-844-1	CHASSIS (OP) ASSY	
267	3-384-467-01	SPRING (CHR)	
268	3-384-464-01	BEARING (FEED)	
269	3-384-472-01	RTAINER (SP)	
* 270	1-646-324-11	DISCRIMINATION BOARD	
271	3-384-460-01	SHAFT (KJ)	
⚠272	8-848-271-01	DEVICE, MINIATURE DISK KMS-150A	
273	3-384-475-01	SPRING (RACK 3)	
274	3-384-836-01	GEAR (SLB)	
275	3-384-465-01	SPRING (FEED SHAFT)	
276	1-645-960-11	PC BOARD, SENSOR FLEXIBLE	
M901	X-3365-848-2	SPINDLE MOTOR ASSY	
M902	X-3365-845-1	SLED MOTOR ASSY	
M903	X-3365-849-1	LOADING MOTOR ASSY	

(5) MD SECTION-3

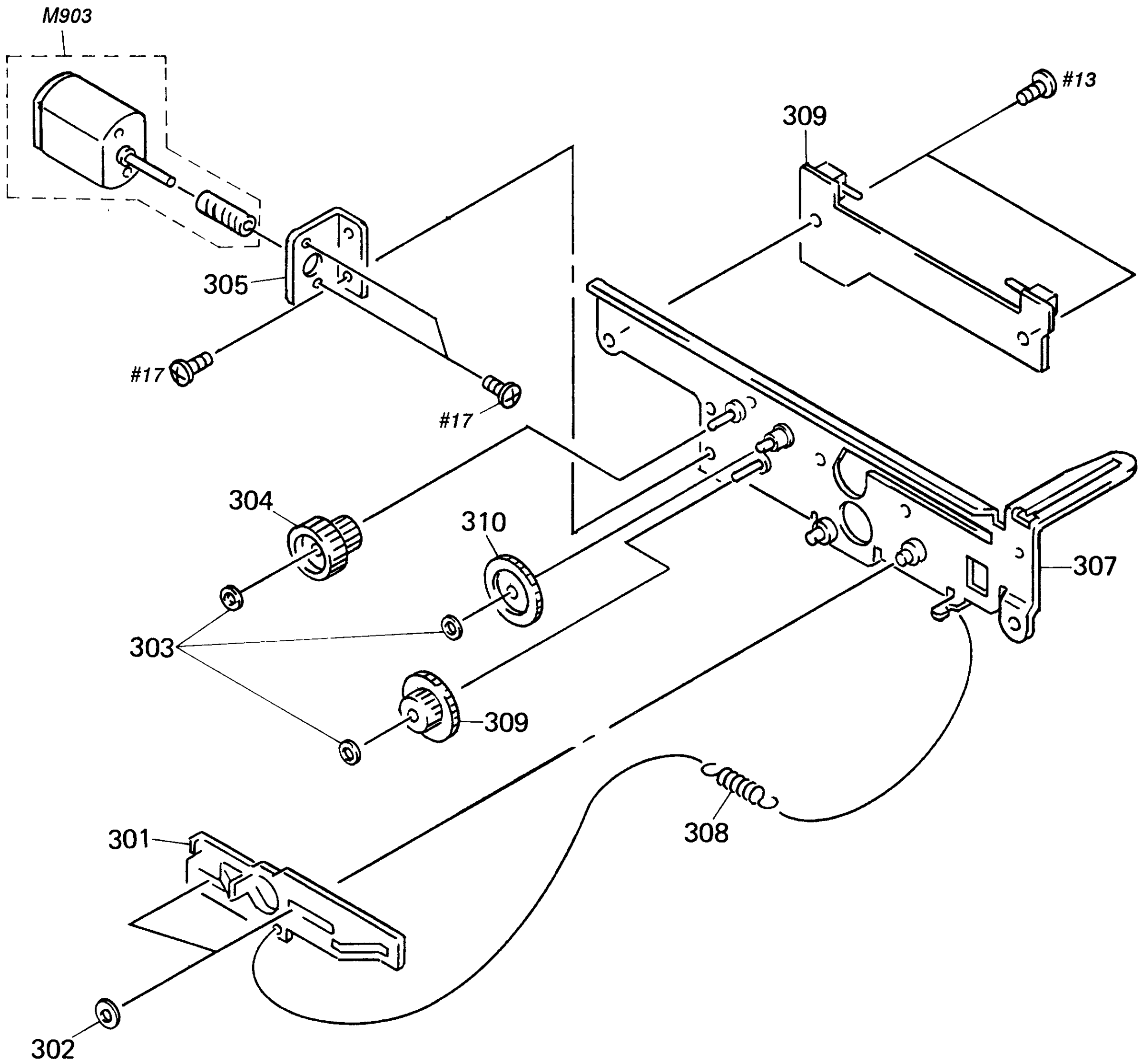

Ref. No.	Part No.	Description	Remark
301	3-384-437-01	LEVER (LOCK L)	
302	3-377-719-01	WASHER, POLYETHYLENE	
303	3-573-936-00	STOPPER, REEL	
304	3-384-440-01	WHEEL, WORM	
* 305	3-384-419-01	BRACKET (M)	
* 306	1-646-322-11	LOADING BOARD	
* 307	X-3365-836-1	CHASSIS (L) ASSY	
308	3-567-110-00	SPRING, TENSION	
309	3-384-441-01	GEAR (A)	
310	3-384-435-01	GEAR (B)	

SECTION 4
ELECTRICAL PARTS LIST

CONNECTOR | LOADING | MAIN

NOTE:

- Due to standardization, replacements in the parts list may be different from the parts specified in the diagrams or the components used on the set.
- -XX and -X mean standardized parts, so they may have some difference from the original one.
- RESISTORS
  All resistors are in ohms.
  METAL: Metal-film resistor
  METAL OXIDE: Metal Oxide-film resistor
  F: nonflammable
- Abbreviation
  CND: Canadian Model
  G: Germany Model
- Items marked "*" are not stocked since they are seldom required for routine service. Some delay should be anticipated when ordering these items.
- SEMICONDUCTORS
  In each case, u: μ, for example:
  uA...: μA..., uPA...: μPA...,
  uPB...: μPB..., uPC...: μPC...,
  uPD...: μPD...
- CAPACITORS
  uF: μF
- COILS
  uH: μH

The components identified by mark ⚠ or dotted line with mark ⚠ are critical for safety.
Replace only with part number specified.

Les composants identifiés par une marque ⚠ sont critiques pour la sécurité.
Ne les remplacer que par une pièce portant le neméro spécifié.

When including parts by reference number, please include the board name.

Ref. No.	Part No.	Description	Remark
*	1-645-957-11	CONNECTOR BOARD ****************	
		< CONNECTOR >	
* CNP702	1-691-558-11	SOCKET, CONNECTOR 12P	
* CNP703	1-691-740-11	CONNECTOR, BOARD TO BOARD 14P	
		< SWITCH >	
S701	1-572-648-11	SWITCH, TACT (RESET)	
*	1-646-324-11	DISCRIMINATION BOARD	
		< SWITCH >	
SW632	1-692-373-21	SWITCH, PUSH (1 KEY) (PB ONLY DISC/REL/PB DISC)	

****

Ref. No.	Part No.	Description	Remark
*	1-646-322-11	LOADING BOARD **************	
		< SWITCH >	
SW621	1-572-467-31	SWITCH, PUSH (1 KEY) (LOADING END)	
SW622	1-572-467-31	SWITCH, PUSH (1 KEY) (LOADING START/EJECT END)	

****

Ref. No.	Part No.	Description	Remark
*	A-3295-301-A	MAIN BOARD, COMPLETE (AEP) ***************************	
*	A-3295-302-A	MAIN BOARD, COMPLETE (G) *************************	
*	A-3295-303-A	MAIN BOARD, COMPLETE (US, CND) ******************************	
*	A-3295-304-A	MAIN BOARD, COMPLETE (E) *************************	
	7-621-259-25	SCREW +P 2.6X4	
		< BUZZER >	
BZ501	1-529-078-11	BUZZER, PIEZOELECTRIC	

< CAPACITOR >

Ref. No.	Part No.	Description			Remark
C1	1-163-141-00	CERAMIC CHIP	0.001uF	5%	50V
C2	1-163-141-00	CERAMIC CHIP	0.001uF	5%	50V
C3	1-163-141-00	CERAMIC CHIP	0.001uF	5%	50V
C4	1-124-257-00	ELECT	2.2uF	20%	50V
C5	1-163-037-11	CERAMIC CHIP	0.022uF	10%	25V
C6	1-124-589-11	ELECT	47uF	20%	16V
C7	1-164-343-11	CERAMIC CHIP	0.056uF	10%	25V
C8	1-163-038-00	CERAMIC CHIP	0.1uF		25V
C9	1-163-037-11	CERAMIC CHIP	0.022uF	10%	25V
C11	1-126-157-11	ELECT	10uF	20%	16V
C12	1-164-232-11	CERAMIC CHIP	0.01uF		50V
C13	1-163-229-11	CERAMIC CHIP	12PF	5%	50V
C14	1-163-117-00	CERAMIC CHIP	100PF	5%	50V
C15	1-163-141-00	CERAMIC CHIP	0.001uF	5%	50V
C16	1-164-232-11	CERAMIC CHIP	0.01uF		50V
C17	1-126-163-11	ELECT	4.7uF	20%	50V
C18	1-164-182-11	CERAMIC CHIP	0.0033uF	10%	50V
C19	1-163-809-11	CERAMIC CHIP	0.047uF	10%	25V
C22	1-137-319-11	FILM CHIP	0.0047uF	5%	16V
C23	1-104-640-11	FILM CHIP	0.22uF	5%	16V
C24	1-163-117-00	CERAMIC CHIP	100PF	5%	50V
C25	1-163-117-00	CERAMIC CHIP	100PF	5%	50V
C26	1-163-117-00	CERAMIC CHIP	100PF	5%	50V
C27	1-163-117-00	CERAMIC CHIP	100PF	5%	50V
C28	1-163-097-00	CERAMIC CHIP	15PF	5%	50V
C29	1-163-097-00	CERAMIC CHIP	15PF	5%	50V
C30	1-163-037-11	CERAMIC CHIP	0.022uF	10%	25V
C32	1-163-129-00	CERAMIC CHIP	330PF	5%	50V
C33	1-126-609-11	ELECT CHIP	3.3uF	20%	25V
C38	1-163-037-11	CERAMIC CHIP	0.022uF	10%	25V
C39	1-164-232-11	CERAMIC CHIP	0.01uF		50V
C40	1-104-515-11	ELECT CHIP	47uF	20%	10V
C41	1-137-322-11	FILM CHIP	0.0082uF	5%	16V
C42	1-104-516-11	ELECT CHIP	0.1uF	20%	50V
C43	1-163-195-00	CERAMIC CHIP	390PF	5%	50V
C44	1-104-517-11	ELECT CHIP	0.22uF	20%	50V
C45	1-104-516-11	ELECT CHIP	0.1uF	20%	50V
C46	1-104-517-11	ELECT CHIP	0.22uF	20%	50V
C48	1-137-331-11	FILM CHIP	0.047uF	5%	16V
C49	1-137-331-11	FILM CHIP	0.047uF	5%	16V

Ref. No.	Part No.	Description				Remark
C50	1-126-593-11	ELECT CHIP	0.47uF	20%	50V	
C51	1-164-756-11	CERAMIC CHIP	0.0033uF	5%	50V	
C52	1-163-023-00	CERAMIC CHIP	0.015uF	5%	50V	
C53	1-126-592-11	ELECT CHIP	4.7uF	20%	16V	
C54	1-163-058-00	CERAMIC CHIP	0.0082uF	10%	50V	(AEP,G)
C54	1-163-059-00	CERAMIC CHIP	0.01uF	10%	50V	(US,CND,E)
C55	1-137-326-11	FILM CHIP	0.018uF	5%	16V	(AEP,E,G)
C55	1-137-328-11	FILM CHIP	0.027uF	5%	16V	(US,CND)
C56	1-137-326-11	FILM CHIP	0.018uF	5%	16V	(AEP,E,G)
C56	1-137-328-11	FILM CHIP	0.027uF	5%	16V	(US,CND)
C57	1-126-592-11	ELECT CHIP	4.7uF	20%	16V	
C58	1-163-023-00	CERAMIC CHIP	0.015uF	5%	50V	
C59	1-104-515-11	ELECT CHIP	47uF	20%	10V	
C60	1-163-038-00	CERAMIC CHIP	0.1uF		25V	
C61	1-104-515-11	ELECT CHIP	47uF	20%	10V	
C62	1-163-038-00	CERAMIC CHIP	0.1uF		25V	
C63	1-163-075-00	CERAMIC CHIP	0.047uF		50V	
C64	1-163-009-11	CERAMIC CHIP	0.001uF	10%	50V	
C65	1-164-492-11	CERAMIC CHIP	0.15uF	10%	16V	
C66	1-104-518-11	ELECT CHIP	10uF	20%	16V	(AEP,G)
C67	1-104-517-11	ELECT CHIP	0.22uF	20%	50V	
C68	1-163-135-00	CERAMIC CHIP	560PF	5%	50V	(AEP,G)
C69	1-163-038-00	CERAMIC CHIP	0.1uF		25V	(AEP,G)
C70	1-126-610-11	ELECT CHIP	2.2uF	20%	35V	(AEP,G)
C71	1-163-229-11	CERAMIC CHIP	12PF	5%	50V	(AEP,G)
C72	1-163-229-11	CERAMIC CHIP	12PF	5%	50V	(AEP,G)
C73	1-163-038-00	CERAMIC CHIP	0.1uF		25V	(AEP,G)
C74	1-104-518-11	ELECT CHIP	10uF	20%	16V	(AEP,G)
C75	1-163-038-00	CERAMIC CHIP	0.1uF		25V	(AEP,G)
C76	1-163-037-11	CERAMIC CHIP	0.022uF	10%	25V	
C77	1-163-038-00	CERAMIC CHIP	0.1uF		25V	
C78	1-163-038-00	CERAMIC CHIP	0.1uF		25V	
C79	1-126-157-11	ELECT	10uF	20%	16V	
C81	1-137-286-11	FILM CHIP	0.0022uF	5%	16V	
C90	1-163-117-00	CERAMIC CHIP	100PF	5%	50V	
C91	1-163-125-00	CERAMIC CHIP	220PF	5%	50V	(US,CND,E)
C101	1-124-234-00	ELECT	22uF	20%	16V	
C102	1-124-234-00	ELECT	22uF	20%	16V	
C103	1-104-518-11	ELECT CHIP	10uF	20%	16V	
C104	1-104-518-11	ELECT CHIP	10uF	20%	16V	
C105	1-104-515-11	ELECT CHIP	47uF	20%	10V	
C106	1-137-303-11	FILM CHIP	0.056uF	5%	16V	
C107	1-137-303-11	FILM CHIP	0.056uF	5%	16V	
C108	1-137-316-11	FILM CHIP	0.0027uF	5%	16V	
C109	1-137-328-11	FILM CHIP	0.027uF	5%	16V	
C120	1-135-145-11	TANTALUM CHIP	0.47uF	10%	35V	
C123	1-163-117-00	CERAMIC CHIP	100PF	5%	50V	
C124	1-163-117-00	CERAMIC CHIP	100PF	5%	50V	
C125	1-163-117-00	CERAMIC CHIP	100PF	5%	50V	
C126	1-163-117-00	CERAMIC CHIP	100PF	5%	50V	
C201	1-124-234-00	ELECT	22uF	20%	16V	
C202	1-124-234-00	ELECT	22uF	20%	16V	
C203	1-104-518-11	ELECT CHIP	10uF	20%	16V	
C204	1-104-518-11	ELECT CHIP	10uF	20%	16V	
C205	1-104-515-11	ELECT CHIP	47uF	20%	10V	
C206	1-137-303-11	FILM CHIP	0.056uF	5%	16V	
C207	1-137-303-11	FILM CHIP	0.056uF	5%	16V	
C208	1-137-316-11	FILM CHIP	0.0027uF	5%	16V	
C209	1-137-328-11	FILM CHIP	0.027uF	5%	16V	
C220	1-135-145-11	TANTALUM CHIP	0.47uF	10%	35V	
C223	1-163-117-00	CERAMIC CHIP	100PF	5%	50V	
C224	1-163-117-00	CERAMIC CHIP	100PF	5%	50V	
C225	1-163-117-00	CERAMIC CHIP	100PF	5%	50V	
C226	1-163-117-00	CERAMIC CHIP	100PF	5%	50V	
C301	1-163-037-11	CERAMIC CHIP	0.022uF	10%	25V	
C302	1-164-222-11	CERAMIC CHIP	0.22uF		25V	
C303	1-126-594-11	ELECT CHIP	1uF	20%	50V	
C304	1-163-038-00	CERAMIC CHIP	0.1uF		25V	
C308	1-104-633-11	ELECT	180uF	20%	16V	
C309	1-164-222-11	CERAMIC CHIP	0.22uF		25V	
C310	1-104-633-11	ELECT	180uF	20%	16V	
C501	1-163-037-11	CERAMIC CHIP	0.022uF	10%	25V	
C502	1-163-038-00	CERAMIC CHIP	0.1uF		25V	
C503	1-163-037-11	CERAMIC CHIP	0.022uF	10%	25V	
C504	1-163-038-00	CERAMIC CHIP	0.1uF		25V	
C505	1-163-037-11	CERAMIC CHIP	0.022uF	10%	25V	
C506	1-163-229-11	CERAMIC CHIP	12PF	5%	50V	
C507	1-164-222-11	CERAMIC CHIP	0.22uF		25V	
C508	1-164-346-11	CERAMIC CHIP	1uF		16V	
C509	1-125-701-11	CAP, DOUBLE LAYER	0.047F			
C510	1-104-633-11	ELECT	180uF	20%	16V	
C511	1-104-633-11	ELECT	180uF	20%	16V	
C512	1-135-166-21	TANTALUM CHIP	47uF	10%	10V	
C513	1-135-210-11	TANTALUM CHIP	4.7uF	20%	10V	
C514	1-163-037-11	CERAMIC CHIP	0.022uF	10%	25V	
C515	1-135-210-11	TANTALUM CHIP	4.7uF	20%	10V	
C516	1-104-518-11	ELECT CHIP	10uF	20%	16V	
C517	1-135-210-11	TANTALUM CHIP	4.7uF	20%	10V	
C518	1-128-339-11	ELECT	2200uF	20%	16V	
C519	1-163-229-11	CERAMIC CHIP	12PF	5%	50V	
C520	1-163-038-00	CERAMIC CHIP	0.1uF		25V	
C521	1-164-222-11	CERAMIC CHIP	0.22uF		25V	
C523	1-163-141-00	CERAMIC CHIP	0.001uF	5%	50V	
C524	1-163-141-00	CERAMIC CHIP	0.001uF	5%	50V	
C541	1-164-506-11	CERAMIC CHIP	4.7uF		16V	
C542	1-164-232-11	CERAMIC CHIP	0.01uF		50V	
C551	1-104-518-11	ELECT CHIP	10uF	20%	16V	

MAIN

Ref. No.	Part No.	Description				Remark
C552	1-164-222-11	CERAMIC CHIP	0.22uF		25V	
C585	1-163-117-00	CERAMIC CHIP	100PF	5%	50V	(E)
C585	1-163-243-11	CERAMIC CHIP	47PF	5%	50V	(US, CND, AEP, G)
C586	1-163-117-00	CERAMIC CHIP	100PF	5%	50V	(E)
C586	1-163-243-11	CERAMIC CHIP	47PF	5%	50V	(US, CND, AEP, G)
C601	1-163-038-00	CERAMIC CHIP	0.1uF		25V	
C602	1-163-038-00	CERAMIC CHIP	0.1uF		25V	
C645	1-163-037-11	CERAMIC CHIP	0.022uF	10%	25V	
C650	1-163-229-11	CERAMIC CHIP	12PF	5%	50V	
C901	1-163-009-11	CERAMIC CHIP	0.001uF	10%	50V	
C902	1-163-141-00	CERAMIC CHIP	0.001uF	5%	50V	
C903	1-164-232-11	CERAMIC CHIP	0.01uF		50V	
C904	1-163-235-11	CERAMIC CHIP	22PF	5%	50V	
C905	1-163-097-00	CERAMIC CHIP	15PF	5%	50V	
C906	1-135-259-11	TANTAL. CHIP	10uF	20%	6.3V	
C907	1-135-259-11	TANTAL. CHIP	10uF	20%	6.3V	
C908	1-135-259-11	TANTAL. CHIP	10uF	20%	6.3V	
C909	1-163-038-00	CERAMIC CHIP	0.1uF		25V	
C911	1-164-222-11	CERAMIC CHIP	0.22uF		25V	
C912	1-135-259-11	TANTAL. CHIP	10uF	20%	6.3V	
C913	1-135-259-11	TANTAL. CHIP	10uF	20%	6.3V	
C915	1-163-038-00	CERAMIC CHIP	0.1uF		25V	
C916	1-163-038-00	CERAMIC CHIP	0.1uF		25V	
C917	1-163-038-00	CERAMIC CHIP	0.1uF		25V	
C918	1-163-038-00	CERAMIC CHIP	0.1uF		25V	
C919	1-163-038-00	CERAMIC CHIP	0.1uF		25V	
C991	1-135-210-11	TANTALUM CHIP	4.7uF	20%	10V	
C992	1-164-222-11	CERAMIC CHIP	0.22uF		25V	

< CONNECTOR >

Ref. No.	Part No.	Description	Remark
* CN301	1-506-991-11	PIN, CONNECTOR (PC BOARD) 9P	
* CN501	1-691-739-11	CONNECTOR, BOARD TO BOARD 14P	
CN502	1-580-907-11	PLUG, CONNECTOR (UNILINK)	
CN503	1-691-280-11	CONNECTOR	
* CN504	1-506-984-11	PIN, CONNECTOR (PC BOARD) 2P	
* CN505	1-573-261-41	PIN, CONNECTOR 2P	
* CN901	1-695-577-21	SOCKET, CONNECTOR 19P	
CN902	1-695-546-11	PLUG, CONNECTOR (DIGITAL OUT (OPTICAL))	

< DIODE >

Ref. No.	Part No.	Description		Remark
D1	8-719-971-18	DIODE	1SS318	
D2	8-719-971-18	DIODE	1SS318	
D4	8-719-977-00	DIODE	DTZ5.1C	
D7	8-719-976-85	DIODE	DTZ3.6B	
D8	8-719-988-62	DIODE	1SS355	
D101	8-719-977-17	DIODE	DTZ7.5C	
D201	8-719-977-17	DIODE	DTZ7.5C	
D301	8-719-976-96	DIODE	DTZ4.7C	
D302	8-719-976-96	DIODE	DTZ4.7C	
D501	8-719-977-31	DIODE	DTZ11A	
D502	8-719-977-24	DIODE	DTZ9.1B	
D503	8-719-977-03	DIODE	DTZ5.6B	
D504	8-719-977-03	DIODE	DTZ5.6B	
D505	8-719-988-62	DIODE	1SS355	
D506	8-719-988-62	DIODE	1SS355	
D507	8-719-988-62	DIODE	1SS355	
D508	8-719-988-62	DIODE	1SS355	
D509	8-719-104-34	DIODE	1S2836	
D510	8-719-977-07	DIODE	DTZ6.2B	
D511	8-719-977-07	DIODE	DTZ6.2B	
D512	8-719-977-03	DIODE	DTZ5.6B	
D513	8-719-977-24	DIODE	DTZ9.1B	
D514	8-719-210-33	DIODE	EC10DS2	
D515	8-719-977-07	DIODE	DTZ6.2B	
D516	8-719-977-54	DIODE	DTZ16C	
D517	8-719-977-07	DIODE	DTZ6.2B	
D518	8-719-988-62	DIODE	1SS355	
D519	8-719-977-07	DIODE	DTZ6.2B	
D520	8-719-977-07	DIODE	DTZ6.2B	
D521	8-719-977-07	DIODE	DTZ6.2B	
D522	8-719-977-07	DIODE	DTZ6.2B	
D523	8-719-977-31	DIODE	DTZ11A	
D524	8-719-977-31	DIODE	DTZ11A	
D525	8-719-977-07	DIODE	DTZ6.2B	
D526	8-719-977-07	DIODE	DTZ6.2B	
D527	8-719-977-31	DIODE	DTZ11A	
D528	8-719-977-07	DIODE	DTZ6.2B	
D529	8-719-977-07	DIODE	DTZ6.2B	
D530	8-719-977-07	DIODE	DTZ6.2B	
D531	8-719-977-07	DIODE	DTZ6.2B	
D532	8-719-988-62	DIODE	1SS355	
D533	8-719-988-62	DIODE	1SS355	
D534	8-719-977-07	DIODE	DTZ6.2B	
D535	8-719-988-62	DIODE	1SS355	
D536	8-719-988-62	DIODE	1SS355	
D537	8-719-988-62	DIODE	1SS355	
D538	8-719-988-62	DIODE	1SS355	
D539	8-719-977-07	DIODE	DTZ6.2B	
D540	8-719-977-07	DIODE	DTZ6.2B	
D541	8-719-988-62	DIODE	1SS355	
D542	8-719-977-07	DIODE	DTZ6.2B	
D551	8-719-977-00	DIODE	DTZ5.1C	
D601	8-719-988-62	DIODE	1SS355	
D602	8-719-988-62	DIODE	1SS355	(AEP, G)
D905	8-719-988-62	DIODE	1SS355	

Ref. No.	Part No.	Description	Remark
		< DD CONVERTER >	
DD1	1-466-816-11	CONVERTER UNIT, DC/DC	
		< FERRITE BEAD >	
FB101	1-543-948-11	BEAD, FERRITE (CHIP)	
FB102	1-543-948-11	BEAD, FERRITE (CHIP)	
FB103	1-543-948-11	BEAD, FERRITE (CHIP)	
FB104	1-543-948-11	BEAD, FERRITE (CHIP)	
FB201	1-543-948-11	BEAD, FERRITE (CHIP)	
FB202	1-543-948-11	BEAD, FERRITE (CHIP)	
FB203	1-543-948-11	BEAD, FERRITE (CHIP)	
FB204	1-543-948-11	BEAD, FERRITE (CHIP)	
FB301	1-543-948-11	BEAD, FERRITE (CHIP)	
FB601	1-543-948-11	BEAD, FERRITE (CHIP)	
FB901	1-543-948-11	BEAD, FERRITE (CHIP)	
FB902	1-543-948-11	BEAD, FERRITE (CHIP)	
FB903	1-543-948-11	BEAD, FERRITE (CHIP)	
FB904	1-543-948-11	BEAD, FERRITE (CHIP)	
FB905	1-543-948-11	BEAD, FERRITE (CHIP)	
FB906	1-543-948-11	BEAD, FERRITE (CHIP)	
FB907	1-543-948-11	BEAD, FERRITE (CHIP)	
FB908	1-543-948-11	BEAD, FERRITE (CHIP)	
		< IC >	
IC10	8-759-069-48	IC LA1061MTP-T1	
IC20	8-759-823-81	IC LC7216M	
IC40	8-759-070-45	IC AN7464S	
IC50	8-759-065-98	IC SAA6579T-T (AEP, G)	
IC60	8-759-823-84	IC LC7071NM (AEP, G)	
IC101	8-759-909-71	IC BA4558F	
IC102	8-759-909-71	IC BA4558F	
IC103	8-759-909-71	IC BA4558F	
IC104	8-759-604-64	IC M5203FP	
IC201	8-759-909-71	IC BA4558F	
IC202	8-759-909-71	IC BA4558F	
IC203	8-759-909-71	IC BA4558F	
IC204	8-759-604-64	IC M5203FP	
IC301	8-759-820-15	IC LC7537AN	
IC302	8-759-932-64	IC BU4052BF	
IC303	8-759-909-71	IC BA4558F	
IC501	8-759-100-93	IC uPC393G2	
IC502	8-759-940-45	IC S-8054HN-CB-S	
IC503	8-759-421-13	IC AN8009M	
IC504	8-759-166-46	IC uPD75518GF-090-3B9	
IC601	8-759-089-50	IC uPD75116GF-G00-3BE	
IC602	8-759-513-42	IC X24C04SI (US, CND, E)	
IC602	8-759-513-44	IC X24C16SI (AEP, G)	
IC901	8-759-088-64	IC LC8901Q	

Ref. No.	Part No.	Description	Remark
IC902	8-759-088-65	IC AK4328-VS	
IC904	8-759-711-58	IC NJM78L05UA	
IC905	8-759-045-17	IC NJM79L05UA	
IC991	8-759-711-58	IC NJM78L05UA	
IC992	8-759-078-45	IC NJM78L09UA	
		< JACK >	
* J701	1-563-961-11	SOCKET, CONNECTOR (MAIN (FM/AM))	
* J702	1-563-961-11	SOCKET, CONNECTOR (SUB (FM))	
		< JUMPER RESISTOR >	
JR1	1-216-295-00	METAL CHIP 0 5% 1/10W	
JR501	1-216-295-00	METAL CHIP 0 5% 1/10W	
JR502	1-216-295-00	METAL CHIP 0 5% 1/10W	
JR601	1-216-295-00	METAL CHIP 0 5% 1/10W	(US, CND)
JR602	1-216-864-11	METAL CHIP 0 5% 1/16W	(US, CND, E)
JR603	1-216-864-11	METAL CHIP 0 5% 1/16W	(US, CND, E)
JR604	1-216-864-11	METAL CHIP 0 5% 1/16W	(US, CND)
JR605	1-216-864-11	METAL CHIP 0 5% 1/16W	
JR606	1-216-295-00	METAL CHIP 0 5% 1/10W	(US, CND, E)
JR607	1-216-295-00	METAL CHIP 0 5% 1/10W	(US, CND, E)
JR608	1-216-295-00	METAL CHIP 0 5% 1/10W	(US, CND, E)
JR609	1-216-295-00	METAL CHIP 0 5% 1/10W	(US, CND, E)
JR610	1-216-295-00	METAL CHIP 0 5% 1/10W	(US, CND, E)
JR611	1-216-295-00	METAL CHIP 0 5% 1/10W	(US, CND, E)
		< COIL >	
L1	1-412-137-11	INDUCTOR 10uH	
L2	1-412-137-11	INDUCTOR 10uH	
L4	1-412-137-11	INDUCTOR 10uH	
L6	1-412-137-11	INDUCTOR 10uH (AEP, G)	
L7	1-410-200-31	INDUCTOR CHIP 4.7uH	
L21	1-412-138-11	INDUCTOR 100uH	
L501	1-412-137-11	INDUCTOR 10uH	
L601	1-412-137-11	INDUCTOR 10uH	
		< TRANSISTOR >	
Q1	8-729-901-01	TRANSISTOR DTC144EK	
Q2	8-729-901-04	TRANSISTOR DTA114EK	
Q3	8-729-120-28	TRANSISTOR 2SC1623-L5L6	
Q5	8-729-120-28	TRANSISTOR 2SC1623-L5L6	
Q6	8-729-216-22	TRANSISTOR 2SA1162-G	
Q8	8-729-809-71	TRANSISTOR 2SK536	
Q9	8-729-900-53	TRANSISTOR DTC114EK	
Q10	8-729-923-73	TRANSISTOR DTA123YK	
Q11	8-729-923-73	TRANSISTOR DTA123YK	
Q12	8-729-901-01	TRANSISTOR DTC144EK	
Q13	8-729-120-28	TRANSISTOR 2SC1623-L5L6	
Q21	8-729-901-06	TRANSISTOR DTA144EK	

MAIN

Ref. No.	Part No.	Description		Remark
Q101	8-729-920-21	TRANSISTOR	DTC314TKH04	
Q102	8-729-920-21	TRANSISTOR	DTC314TKH04	
Q103	8-729-920-21	TRANSISTOR	DTC314TKH04	
Q104	8-729-920-21	TRANSISTOR	DTC314TKH04	
Q201	8-729-920-21	TRANSISTOR	DTC314TKH04	
Q202	8-729-920-21	TRANSISTOR	DTC314TKH04	
Q203	8-729-920-21	TRANSISTOR	DTC314TKH04	
Q204	8-729-920-21	TRANSISTOR	DTC314TKH04	
Q301	8-729-901-05	TRANSISTOR	DTA124EK	
Q302	8-729-920-21	TRANSISTOR	DTC314TKH04	
Q303	8-729-920-21	TRANSISTOR	DTC314TKH04	
Q304	8-729-901-05	TRANSISTOR	DTA124EK	
Q305	8-729-920-21	TRANSISTOR	DTC314TKH04	
Q501	8-729-901-05	TRANSISTOR	DTA124EK	
Q502	8-729-901-00	TRANSISTOR	DTC124EK	
Q503	8-729-921-48	TRANSISTOR	2SD1760F5-Q	
Q504	8-729-921-48	TRANSISTOR	2SD1760F5-Q	
Q506	8-729-216-22	TRANSISTOR	2SA1162-G	
Q508	8-729-120-28	TRANSISTOR	2SC1623-L5L6	
Q509	8-729-120-28	TRANSISTOR	2SC1623-L5L6	
Q511	8-729-216-22	TRANSISTOR	2SA1162-G	
Q512	8-729-216-22	TRANSISTOR	2SA1162-G	
Q513	8-729-216-22	TRANSISTOR	2SA1162-G	
Q514	8-729-120-28	TRANSISTOR	2SC1623-L5L6	
Q515	8-729-120-28	TRANSISTOR	2SC1623-L5L6	
Q516	8-729-920-85	TRANSISTOR	2SD1664-QR	
Q517	8-729-105-29	TRANSISTOR	2SA1385-L	
Q518	8-729-901-00	TRANSISTOR	DTC124EK	
Q520	8-729-920-85	TRANSISTOR	2SD1664-QR	
Q521	8-729-105-29	TRANSISTOR	2SA1385-L	
Q522	8-729-901-00	TRANSISTOR	DTC124EK	
Q523	8-729-921-48	TRANSISTOR	2SD1760F5-Q	
Q524	8-729-120-28	TRANSISTOR	2SC1623-L5L6	
Q525	8-729-120-28	TRANSISTOR	2SC1623-L5L6	
Q526	8-729-901-01	TRANSISTOR	DTC144EK	
Q528	8-729-901-00	TRANSISTOR	DTC124EK	
Q529	8-729-120-28	TRANSISTOR	2SC1623-L5L6	
Q530	8-729-120-28	TRANSISTOR	2SC1623-L5L6	
Q531	8-729-120-28	TRANSISTOR	2SC1623-L5L6	
Q532	8-729-904-57	TRANSISTOR	DTB114EK	
Q533	8-729-900-53	TRANSISTOR	DTC114EK	
Q534	8-729-901-04	TRANSISTOR	DTA114EK	
Q535	8-729-900-53	TRANSISTOR	DTC114EK	
Q536	8-729-900-53	TRANSISTOR	DTC114EK	
Q537	8-729-120-28	TRANSISTOR	2SC1623-L5L6	
Q601	8-729-904-57	TRANSISTOR	DTB114EK (AEP, G)	
Q904	8-729-904-75	TRANSISTOR	DTD114EK	
Q905	8-729-904-57	TRANSISTOR	DTB114EK	
Q906	8-729-920-21	TRANSISTOR	DTC314TKH04	
Q907	8-729-920-21	TRANSISTOR	DTC314TKH04	
Q991	8-729-904-57	TRANSISTOR	DTB114EK	
Q992	8-729-901-05	TRANSISTOR	DTA124EK	

< RESISTOR >

Ref. No.	Part No.	Description			Remark
R1	1-216-065-00	METAL CHIP	4.7K	5%	1/10W
R2	1-216-057-00	METAL CHIP	2.2K	5%	1/10W
R3	1-216-065-00	METAL CHIP	4.7K	5%	1/10W
R4	1-216-041-00	METAL CHIP	470	5%	1/10W
R5	1-216-049-00	METAL CHIP	1K	5%	1/10W
R6	1-216-077-00	METAL CHIP	15K	5%	1/10W
R7	1-216-069-00	METAL CHIP	6.8K	5%	1/10W
R8	1-216-049-00	METAL CHIP	1K	5%	1/10W
R9	1-216-057-00	METAL CHIP	2.2K	5%	1/10W
R10	1-216-097-00	METAL CHIP	100K	5%	1/10W
R11	1-216-091-00	METAL CHIP	56K	5%	1/10W
R12	1-216-105-00	METAL CHIP	220K	5%	1/10W
R13	1-216-093-00	METAL CHIP	68K	5%	1/10W
R14	1-216-075-00	METAL CHIP	12K	5%	1/10W
R15	1-216-121-00	METAL CHIP	1M	5%	1/10W
R16	1-216-073-00	METAL CHIP	10K	5%	1/10W
R17	1-216-097-00	METAL CHIP	100K	5%	1/10W
R18	1-216-073-00	METAL CHIP	10K	5%	1/10W
R19	1-216-049-00	METAL CHIP	1K	5%	1/10W
R20	1-216-091-00	METAL CHIP	56K	5%	1/10W
R21	1-216-845-11	METAL CHIP	100K	5%	1/16W
R22	1-216-082-00	METAL GLAZE	24K	5%	1/10W
R23	1-216-295-00	METAL CHIP	0	5%	1/10W
R24	1-216-049-00	METAL CHIP	1K	5%	1/10W
R25	1-216-065-00	METAL CHIP	4.7K	5%	1/10W
R26	1-216-057-00	METAL CHIP	2.2K	5%	1/10W
R27	1-216-069-00	METAL CHIP	6.8K	5%	1/10W
R30	1-216-073-00	METAL CHIP	10K	5%	1/10W
R31	1-216-081-00	METAL CHIP	22K	5%	1/10W
R32	1-216-049-00	METAL CHIP	1K	5%	1/10W
R33	1-216-150-00	METAL GLAZE	10	5%	1/8W
R34	1-216-113-00	METAL CHIP	470K	5%	1/10W
R35	1-216-103-00	METAL CHIP	180K	5%	1/10W
R36	1-216-075-00	METAL CHIP	12K	5%	1/10W
R37	1-216-061-00	METAL CHIP	3.3K	5%	1/10W
R38	1-216-073-00	METAL CHIP	10K	5%	1/10W
R39	1-216-075-00	METAL CHIP	12K	5%	1/10W
R40	1-216-053-00	METAL CHIP	1.5K	5%	1/10W
R41	1-216-113-00	METAL CHIP	470K	5%	1/10W
R42	1-216-049-00	METAL CHIP	1K	5%	1/10W
R43	1-216-689-11	METAL CHIP	39K	0.5%	1/10W
R44	1-216-083-00	METAL CHIP	27K	5%	1/10W
R46	1-216-089-00	METAL CHIP	47K	5%	1/10W

Ref. No.	Part No.	Description	Remark
R47	1-216-097-00	METAL CHIP	100K 5% 1/10W
R50	1-216-095-00	METAL CHIP	82K 5% 1/10W (EXCEPT G)
R50	1-216-097-00	METAL CHIP	100K 5% 1/10W (G)
R51	1-216-095-00	METAL CHIP	82K 5% 1/10W (EXCEPT G)
R51	1-216-097-00	METAL CHIP	100K 5% 1/10W (G)
R52	1-216-097-00	METAL CHIP	100K 5% 1/10W (AEP, G)
R53	1-216-097-00	METAL CHIP	100K 5% 1/10W (AEP, G)
R54	1-216-097-00	METAL CHIP	100K 5% 1/10W (AEP, G)
R55	1-216-073-00	METAL CHIP	10K 5% 1/10W (AEP, G)
R56	1-216-001-00	METAL CHIP	10 5% 1/10W (AEP, G)
R61	1-216-059-00	METAL CHIP	2.7K 5% 1/10W
R62	1-216-109-00	METAL CHIP	330K 5% 1/10W
R63	1-216-105-00	METAL CHIP	220K 5% 1/10W
R70	1-216-089-00	METAL CHIP	47K 5% 1/10W (G)
R70	1-216-091-00	METAL CHIP	56K 5% 1/10W (AEP, E, G)
R70	1-216-092-00	METAL GLAZE	62K 5% 1/10W (US, CND)
R80	1-216-089-00	METAL CHIP	47K 5% 1/10W (G)
R80	1-216-091-00	METAL CHIP	56K 5% 1/10W (AEP, E, G)
R80	1-216-092-00	METAL GLAZE	62K 5% 1/10W (US, CND)
R99	1-249-429-11	CARBON	10K 5% 1/4W (US, CND, E)
R99	1-249-437-11	CARBON	47K 5% 1/4W (AEP, G)
R101	1-216-089-00	METAL CHIP	47K 5% 1/10W
R102	1-216-057-00	METAL CHIP	2.2K 5% 1/10W
R103	1-216-073-00	METAL CHIP	10K 5% 1/10W
R104	1-216-057-00	METAL CHIP	2.2K 5% 1/10W
R105	1-216-073-00	METAL CHIP	10K 5% 1/10W
R106	1-216-073-00	METAL CHIP	10K 5% 1/10W
R107	1-216-073-00	METAL CHIP	10K 5% 1/10W
R108	1-216-121-00	METAL CHIP	1M 5% 1/10W
R109	1-216-073-00	METAL CHIP	10K 5% 1/10W
R110	1-216-073-00	METAL CHIP	10K 5% 1/10W
R111	1-216-121-00	METAL CHIP	1M 5% 1/10W
R112	1-216-041-00	METAL CHIP	470 5% 1/10W
R113	1-216-077-00	METAL CHIP	15K 5% 1/10W
R114	1-216-061-00	METAL CHIP	3.3K 5% 1/10W
R115	1-216-121-00	METAL CHIP	1M 5% 1/10W
R117	1-216-837-11	METAL CHIP	22K 5% 1/16W
R118	1-216-836-11	METAL CHIP	18K 5% 1/16W
R119	1-216-834-11	METAL CHIP	12K 5% 1/16W
R120	1-218-345-11	METAL GLAZE	9.1K 5% 1/16W
R121	1-216-081-00	METAL CHIP	22K 5% 1/10W
R122	1-216-081-00	METAL CHIP	22K 5% 1/10W
R123	1-216-041-00	METAL CHIP	470 5% 1/10W
R124	1-216-121-00	METAL CHIP	1M 5% 1/10W
R127	1-216-072-00	METAL CHIP	9.1K 5% 1/10W
R128	1-216-045-00	METAL CHIP	680 5% 1/10W (G)
R128	1-216-047-00	METAL CHIP	820 5% 1/10W (AEP, E, G)
R128	1-216-051-00	METAL CHIP	1.2K 5% 1/10W (US, CND)
R129	1-216-073-00	METAL CHIP	10K 5% 1/10W
R131	1-216-864-11	METAL CHIP	0 5% 1/16W
R133	1-216-089-00	METAL CHIP	47K 5% 1/10W
R134	1-216-822-11	METAL CHIP	1.2K 5% 1/16W
R201	1-216-089-00	METAL CHIP	47K 5% 1/10W
R202	1-216-057-00	METAL CHIP	2.2K 5% 1/10W
R203	1-216-073-00	METAL CHIP	10K 5% 1/10W
R204	1-216-057-00	METAL CHIP	2.2K 5% 1/10W
R205	1-216-073-00	METAL CHIP	10K 5% 1/10W
R206	1-216-073-00	METAL CHIP	10K 5% 1/10W
R207	1-216-073-00	METAL CHIP	10K 5% 1/10W
R208	1-216-121-00	METAL CHIP	1M 5% 1/10W
R209	1-216-073-00	METAL CHIP	10K 5% 1/10W
R210	1-216-073-00	METAL CHIP	10K 5% 1/10W
R211	1-216-121-00	METAL CHIP	1M 5% 1/10W
R212	1-216-041-00	METAL CHIP	470 5% 1/10W
R213	1-216-835-11	METAL CHIP	15K 5% 1/16W
R214	1-216-827-11	METAL CHIP	3.3K 5% 1/16W
R215	1-216-121-00	METAL CHIP	1M 5% 1/10W
R217	1-216-837-11	METAL CHIP	22K 5% 1/16W
R218	1-216-836-11	METAL CHIP	18K 5% 1/16W
R219	1-216-834-11	METAL CHIP	12K 5% 1/16W
R220	1-218-345-11	METAL GLAZE	9.1K 5% 1/16W
R221	1-216-081-00	METAL CHIP	22K 5% 1/10W
R222	1-216-081-00	METAL CHIP	22K 5% 1/10W
R223	1-216-041-00	METAL CHIP	470 5% 1/10W
R224	1-216-121-00	METAL CHIP	1M 5% 1/10W
R227	1-216-072-00	METAL CHIP	9.1K 5% 1/10W
R228	1-216-045-00	METAL CHIP	680 5% 1/10W (G)
R228	1-216-047-00	METAL CHIP	820 5% 1/10W (AEP, E, G)
R228	1-216-051-00	METAL CHIP	1.2K 5% 1/10W (US, CND)
R229	1-249-429-11	CARBON	10K 5% 1/4W
R231	1-216-864-11	METAL CHIP	0 5% 1/16W
R233	1-216-089-00	METAL CHIP	47K 5% 1/10W
R234	1-216-822-11	METAL CHIP	1.2K 5% 1/16W
R301	1-216-097-00	METAL CHIP	100K 5% 1/10W
R302	1-216-049-00	METAL CHIP	1K 5% 1/10W
R303	1-216-109-00	METAL CHIP	330K 5% 1/10W
R304	1-216-041-00	METAL CHIP	470 5% 1/10W
R305	1-216-097-00	METAL CHIP	100K 5% 1/10W
R306	1-216-841-11	METAL CHIP	47K 5% 1/16W
R307	1-216-073-00	METAL CHIP	10K 5% 1/10W
R308	1-216-097-00	METAL CHIP	100K 5% 1/10W
R309	1-216-097-00	METAL CHIP	100K 5% 1/10W
R501	1-216-039-00	METAL CHIP	390 5% 1/10W
R502	1-216-049-00	METAL CHIP	1K 5% 1/10W
R504	1-216-049-00	METAL CHIP	1K 5% 1/10W
R505	1-216-841-11	METAL CHIP	47K 5% 1/16W
R506	1-216-025-00	METAL CHIP	100 5% 1/10W

MAIN

Ref. No.	Part No.	Description			Remark
R507	1-216-025-00	METAL CHIP	100	5%	1/10W
R508	1-216-089-00	METAL CHIP	47K	5%	1/10W
R509	1-216-841-11	METAL CHIP	47K	5%	1/16W
R510	1-216-841-11	METAL CHIP	47K	5%	1/16W
R511	1-216-049-00	METAL CHIP	1K	5%	1/10W
R512	1-216-089-00	METAL CHIP	47K	5%	1/10W
R513	1-216-049-00	METAL CHIP	1K	5%	1/10W
R514	1-216-049-00	METAL CHIP	1K	5%	1/10W
R515	1-216-833-11	METAL CHIP	10K	5%	1/16W
R516	1-216-837-11	METAL CHIP	22K	5%	1/16W
R517	1-216-833-11	METAL CHIP	10K	5%	1/16W
R518	1-216-081-00	METAL CHIP	22K	5%	1/10W
R519	1-216-828-11	METAL CHIP	3.9K	5%	1/16W
R520	1-216-837-11	METAL CHIP	22K	5%	1/16W
R521	1-216-065-00	METAL CHIP	4.7K	5%	1/10W
R522	1-216-841-11	METAL CHIP	47K	5%	1/16W
R523	1-216-841-11	METAL CHIP	47K	5%	1/16W
R524	1-216-845-11	METAL CHIP	100K	5%	1/16W
R525	1-216-845-11	METAL CHIP	100K	5%	1/16W
R526	1-216-821-11	METAL CHIP	1K	5%	1/16W
R527	1-216-049-00	METAL CHIP	1K	5%	1/10W
R528	1-216-841-11	METAL CHIP	47K	5%	1/16W
R529	1-216-841-11	METAL CHIP	47K	5%	1/16W
R530	1-216-841-11	METAL CHIP	47K	5%	1/16W
R531	1-216-049-00	METAL CHIP	1K	5%	1/10W
R532	1-216-841-11	METAL CHIP	47K	5%	1/16W
R533	1-216-049-00	METAL CHIP	1K	5%	1/10W
R534	1-216-097-00	METAL CHIP	100K	5%	1/10W
R535	1-216-097-00	METAL CHIP	100K	5%	1/10W
R536	1-216-065-00	METAL CHIP	4.7K	5%	1/10W
R537	1-216-097-00	METAL CHIP	100K	5%	1/10W
R538	1-216-097-00	METAL CHIP	100K	5%	1/10W
R539	1-216-081-00	METAL CHIP	22K	5%	1/10W
R540	1-216-081-00	METAL CHIP	22K	5%	1/10W
R541	1-216-073-00	METAL CHIP	10K	5%	1/10W
R542	1-216-073-00	METAL CHIP	10K	5%	1/10W
R543	1-216-073-00	METAL CHIP	10K	5%	1/10W
R544	1-216-206-00	METAL GLAZE	2.2K	5%	1/8W
R545	1-216-206-00	METAL GLAZE	2.2K	5%	1/8W
R546	1-216-206-00	METAL GLAZE	2.2K	5%	1/8W
R547	1-216-073-00	METAL CHIP	10K	5%	1/10W
R548	1-216-057-00	METAL CHIP	2.2K	5%	1/10W
R549	1-216-073-00	METAL CHIP	10K	5%	1/10W
R550	1-216-206-00	METAL GLAZE	2.2K	5%	1/8W
R551	1-216-206-00	METAL GLAZE	2.2K	5%	1/8W
R552	1-216-206-00	METAL GLAZE	2.2K	5%	1/8W
R553	1-216-051-00	METAL CHIP	1.2K	5%	1/10W
R554	1-216-097-00	METAL CHIP	100K	5%	1/10W
R555	1-216-025-00	METAL CHIP	100	5%	1/10W

Ref. No.	Part No.	Description			Remark
R556	1-216-097-00	METAL CHIP	100K	5%	1/10W
R557	1-216-089-00	METAL CHIP	47K	5%	1/10W
R558	1-216-105-00	METAL CHIP	220K	5%	1/10W
R559	1-216-226-00	METAL GLAZE	15K	5%	1/8W
R560	1-216-089-00	METAL CHIP	47K	5%	1/10W
R561	1-216-218-00	METAL GLAZE	6.8K	5%	1/8W
R562	1-216-025-00	METAL CHIP	100	5%	1/10W
R563	1-216-097-00	METAL CHIP	100K	5%	1/10W
R564	1-216-073-00	METAL CHIP	10K	5%	1/10W
R565	1-216-049-00	METAL CHIP	1K	5%	1/10W
R566	1-216-222-00	METAL GLAZE	10K	5%	1/8W
R567	1-216-051-00	METAL CHIP	1.2K	5%	1/10W
R568	1-216-089-00	METAL CHIP	47K	5%	1/10W
R569	1-216-851-11	METAL CHIP	330K	5%	1/16W
R570	1-216-097-00	METAL CHIP	100K	5%	1/10W
R571	1-216-226-00	METAL GLAZE	15K	5%	1/8W
R572	1-216-216-00	METAL GLAZE	5.6K	5%	1/8W
R573	1-216-097-00	METAL CHIP	100K	5%	1/10W
R574	1-216-295-00	METAL CHIP	0	5%	1/10W (US, CND, E)
R575	1-216-089-00	METAL CHIP	47K	5%	1/10W
R579	1-216-065-00	METAL CHIP	4.7K	5%	1/10W
R580	1-216-065-00	METAL CHIP	4.7K	5%	1/10W
R581	1-216-065-00	METAL CHIP	4.7K	5%	1/10W
R591	1-216-051-00	METAL CHIP	1.2K	5%	1/10W
R592	1-216-845-11	METAL CHIP	100K	5%	1/16W
R593	1-216-097-00	METAL CHIP	100K	5%	1/10W
R601	1-216-089-00	METAL CHIP	47K	5%	1/10W
R602	1-216-097-00	METAL CHIP	100K	5%	1/10W
R603	1-216-097-00	METAL CHIP	100K	5%	1/10W (AEP, E, G)
R604	1-216-845-11	METAL CHIP	100K	5%	1/16W (AEP, G)
R605	1-216-845-11	METAL CHIP	100K	5%	1/16W (AEP, G)
R606	1-216-845-11	METAL CHIP	100K	5%	1/16W (AEP, E, G)
R901	1-216-842-11	METAL CHIP	56K	5%	1/16W
R902	1-216-842-11	METAL CHIP	56K	5%	1/16W
R903	1-216-025-00	METAL CHIP	100	5%	1/10W
R904	1-216-025-00	METAL CHIP	100	5%	1/10W
R905	1-216-085-00	METAL CHIP	33K	5%	1/10W
R907	1-216-066-00	METAL CHIP	5.1K	5%	1/10W
R908	1-216-082-00	METAL GLAZE	24K	5%	1/10W
R909	1-216-066-00	METAL CHIP	5.1K	5%	1/10W
R910	1-216-029-00	METAL CHIP	150	5%	1/10W
R912	1-216-032-00	METAL CHIP	200	5%	1/10W
R914	1-216-049-00	METAL CHIP	1K	5%	1/10W
R915	1-216-049-00	METAL CHIP	1K	5%	1/10W
R916	1-216-809-11	METAL CHIP	100	5%	1/16W
R917	1-216-815-11	METAL CHIP	330	5%	1/16W
R918	1-216-815-11	METAL CHIP	330	5%	1/16W
R919	1-216-821-11	METAL CHIP	1K	5%	1/16W
R920	1-216-025-00	METAL CHIP	100	5%	1/10W

Ref. No.	Part No.	Description			Remark
R928	1-216-049-00	METAL CHIP	1K	5%	1/10W
R929	1-216-049-00	METAL CHIP	1K	5%	1/10W
R930	1-216-103-00	METAL CHIP	180K	5%	1/10W
R941	1-216-065-00	METAL CHIP	4.7K	5%	1/10W
R942	1-216-065-00	METAL CHIP	4.7K	5%	1/10W
R943	1-216-065-00	METAL CHIP	4.7K	5%	1/10W
R982	1-216-864-11	METAL CHIP	0	5%	1/16W
R991	1-216-104-00	METAL CHIP	200K	5%	1/10W

< VARIABLE RESISTOR >

Ref. No.	Part No.	Description
RV2	1-238-208-21	RES, ADJ, METAL GLAZE 220K
RV3	1-238-204-11	RES, ADJ, METAL GLAZE 10K
RV4	1-237-002-11	RES, ADJ, METAL GLAZE 2.2K
RV6	1-238-206-11	RES, ADJ, METAL GLAZE 47K
RV9	1-238-208-21	RES, ADJ, METAL GLAZE 220K

< SWITCH >

Ref. No.	Part No.	Description
S10	1-572-272-11	SWITCH, SLIDE (DIVERSITY)
S501	1-572-272-11	SWITCH, SLIDE (POWER SELECT)
S601	1-572-272-11	SWITCH, SLIDE (9K/10K) (E)

< THERMISTOR >

Ref. No.	Part No.	Description
TH501	1-809-148-11	THERMISTOR, POSITIVE
TH502	1-809-148-11	THERMISTOR, POSITIVE

< TUNER >

Ref. No.	Part No.	Description
TU10	1-693-044-21	TUNER UNIT (FM/MW/LW) (AEP)
TU10	1-693-045-11	TUNER UNIT (FM/AM) (US, CND, E)

< VIBRATOR >

Ref. No.	Part No.	Description
X1	1-567-848-11	VIBRATOR, CRYSTAL (7.2MHz)
X2	1-567-819-11	VIBRATOR, CERAMIC (4MHz) (AEP)
X3	1-579-242-11	VIBRATOR, CRYSTAL (4.332MHz) (AEP)
X501	1-567-776-21	VIBRATOR, CERAMIC (6.0MHz)
X502	1-579-709-11	VIBRATOR, CRYSTAL (32.768MHz)
X601	1-567-775-11	VIBRATOR, CERAMIC (4.19MHz)
X901	1-579-314-11	VIBRATOR, CRYSTAL (22.5792MHz)

****

* A-3222-496-A MD BOARD, COMPLETE

****

< CAPACITOR >

Ref. No.	Part No.	Description			Remark
C501	1-162-959-11	CERAMIC CHIP	330PF	5%	50V
C502	1-164-343-11	CERAMIC CHIP	0.056uF	10%	25V
C503	1-162-970-11	CERAMIC CHIP	0.01uF	10%	25V
C504	1-163-809-11	CERAMIC CHIP	0.047uF	10%	25V
C505	1-164-676-11	CERAMIC CHIP	2200PF	5%	16V
C506	1-162-946-11	CERAMIC CHIP	27PF	5%	50V
C507	1-162-968-11	CERAMIC CHIP	0.0047uF	10%	50V
C508	1-135-161-21	TANTALUM CHIP	22uF	10%	10V
C509	1-135-161-21	TANTALUM CHIP	22uF	10%	10V
C510	1-162-970-11	CERAMIC CHIP	0.01uF	10%	25V
C511	1-135-161-21	TANTALUM CHIP	22uF	10%	10V
C512	1-135-161-21	TANTALUM CHIP	22uF	10%	10V
C513	1-163-809-11	CERAMIC CHIP	0.047uF	10%	25V
C514	1-162-970-11	CERAMIC CHIP	0.01uF	10%	25V
C515	1-162-979-11	CERAMIC CHIP	0.0027uF	10%	50V
C516	1-164-677-11	CERAMIC CHIP	0.033uF	10%	16V
C517	1-135-192-21	TANTAL. CHIP	0.47uF	10%	20V
C518	1-164-004-11	CERAMIC CHIP	0.1uF	10%	25V
C519	1-162-969-11	CERAMIC CHIP	0.0068uF	10%	25V
C520	1-164-357-11	CERAMIC CHIP	1000PF	5%	50V
C521	1-162-953-11	CERAMIC CHIP	100PF	5%	50V
C522	1-164-227-11	CERAMIC CHIP	0.022uF	10%	25V
C523	1-162-970-11	CERAMIC CHIP	0.01uF	10%	25V
C524	1-164-357-11	CERAMIC CHIP	1000PF	5%	50V
C525	1-164-357-11	CERAMIC CHIP	1000PF	5%	50V
C526	1-135-161-21	TANTALUM CHIP	22uF	10%	10V
C530	1-164-357-11	CERAMIC CHIP	1000PF	5%	50V
C531	1-164-227-11	CERAMIC CHIP	0.022uF	10%	25V
C532	1-164-227-11	CERAMIC CHIP	0.022uF	10%	25V
C533	1-162-968-11	CERAMIC CHIP	0.0047uF	10%	50V
C534	1-164-677-11	CERAMIC CHIP	0.033uF	10%	16V
C535	1-162-568-11	CERAMIC CHIP	0.33uF	10%	16V
C536	1-162-568-11	CERAMIC CHIP	0.33uF	10%	16V
C537	1-162-568-11	CERAMIC CHIP	0.33uF	10%	16V
C538	1-162-568-11	CERAMIC CHIP	0.33uF	10%	16V
C539	1-162-568-11	CERAMIC CHIP	0.33uF	10%	16V
C540	1-164-004-11	CERAMIC CHIP	0.1uF	10%	25V
C541	1-164-004-11	CERAMIC CHIP	0.1uF	10%	25V
C542	1-135-155-21	TANTALUM CHIP	4.7uF	10%	16V
C543	1-164-004-11	CERAMIC CHIP	0.1uF	10%	25V
C544	1-162-568-11	CERAMIC CHIP	0.33uF	10%	16V
C545	1-135-216-11	TANTALUM CHIP	10uF	20%	10V
C546	1-164-677-11	CERAMIC CHIP	0.033uF	10%	16V
C547	1-162-568-11	CERAMIC CHIP	0.33uF	10%	16V
C548	1-162-953-11	CERAMIC CHIP	100PF	5%	50V
C549	1-162-953-11	CERAMIC CHIP	100PF	5%	50V
C550	1-162-568-11	CERAMIC CHIP	0.33uF	10%	16V
C551	1-104-700-11	CERAMIC CHIP	0.027uF	10%	16V
C553	1-162-568-11	CERAMIC CHIP	0.33uF	10%	16V
C554	1-162-915-11	CERAMIC CHIP	10PF	0.5PF	50V
C555	1-162-915-11	CERAMIC CHIP	10PF	0.5PF	50V
C556	1-162-970-11	CERAMIC CHIP	0.01uF	10%	25V
C557	1-162-970-11	CERAMIC CHIP	0.01uF	10%	25V
C560	1-162-970-11	CERAMIC CHIP	0.01uF	10%	25V
C561	1-162-916-11	CERAMIC CHIP	12PF	5%	50V

MD

Ref. No.	Part No.	Description	Remark
C562	1-162-916-11	CERAMIC CHIP 12PF 5% 50V	
C563	1-164-004-11	CERAMIC CHIP 0.1uF 10% 25V	
C565	1-164-004-11	CERAMIC CHIP 0.1uF 10% 25V	
C566	1-162-970-11	CERAMIC CHIP 0.01uF 10% 25V	
C567	1-164-227-11	CERAMIC CHIP 0.022uF 10% 25V	
C570	1-162-912-11	CERAMIC CHIP 7PF 0.5PF 50V	
C573	1-162-970-11	CERAMIC CHIP 0.01uF 10% 25V	
C574	1-162-970-11	CERAMIC CHIP 0.01uF 10% 25V	
C577	1-135-161-21	TANTALUM CHIP 22uF 10% 10V	
C591	1-135-161-21	TANTALUM CHIP 22uF 10% 10V	
C592	1-135-161-21	TANTALUM CHIP 22uF 10% 10V	
		< CONNECTOR >	
CNP501	1-568-740-11	CONNECTOR, FPC (1.0MM)(ZIF)18P	
CNP502	1-580-438-21	CONNECTOR, FPC 4P	
CNP503	1-691-799-11	SOCKET, CONNECTOR 8P	
* CNP505	1-506-998-11	PIN, CONNECTOR (PC BOARD) 2P	
* CNP506	1-506-999-11	PIN, CONNECTOR (PC BOARD) 3P	
CNP507	1-573-773-11	SOCKET, CONNECTOR 25P	
		< DIODE >	
D502	8-719-988-62	DIODE 1SS355	
		< FERRITE BEAD >	
FB501	1-543-948-11	BEAD, FERRITE (CHIP)	
FB502	1-543-948-11	BEAD, FERRITE (CHIP)	
FB503	1-543-948-11	BEAD, FERRITE (CHIP)	
FB504	1-543-948-11	BEAD, FERRITE (CHIP)	
FB505	1-543-948-11	BEAD, FERRITE (CHIP)	
FB506	1-543-948-11	BEAD, FERRITE (CHIP)	
FB507	1-543-948-11	BEAD, FERRITE (CHIP)	
FB508	1-543-948-11	BEAD, FERRITE (CHIP)	
FB509	1-543-948-11	BEAD, FERRITE (CHIP)	
FB510	1-543-948-11	BEAD, FERRITE (CHIP)	
FB511	1-543-948-11	BEAD, FERRITE (CHIP)	
FB512	1-543-948-11	BEAD, FERRITE (CHIP)	
FB513	1-543-948-11	BEAD, FERRITE (CHIP)	
FB514	1-543-948-11	BEAD, FERRITE (CHIP)	
FB515	1-216-049-00	METAL CHIP 1K 5% 1/10W	
FB516	1-543-948-11	BEAD, FERRITE (CHIP)	
FB517	1-543-948-11	BEAD, FERRITE (CHIP)	
FB518	1-543-948-11	BEAD, FERRITE (CHIP)	
FB519	1-543-948-11	BEAD, FERRITE (CHIP)	
FB520	1-543-948-11	BEAD, FERRITE (CHIP)	
FB521	1-543-948-11	BEAD, FERRITE (CHIP)	
FB522	1-543-948-11	BEAD, FERRITE (CHIP)	
FB523	1-543-948-11	BEAD, FERRITE (CHIP)	
FB601	1-543-948-11	BEAD, FERRITE (CHIP)	

Ref. No.	Part No.	Description	Remark
		< IC >	
IC501	8-752-064-33	IC CXA1380N	
IC502	8-752-064-34	IC CXA1381R	
IC503	8-752-057-45	IC CXA1082BQ	
IC504	8-752-352-18	IC CXD2525R	
IC505	8-752-354-57	IC CXD2526Q	
IC506	8-759-057-47	IC MS514400L-80VC	
IC507	8-752-355-96	IC CXD2527R	
IC510	8-752-355-96	IC CXD2527R	
IC513	8-759-071-62	IC BA6298FP	
IC514	- - -	IC uPD78138	
IC515	8-759-234-77	IC TC4S66F	
IC516	8-759-234-77	IC TC4S66F	
IC517	8-759-234-77	IC TC4S66F	
IC519	8-759-040-83	IC BA6287F	
IC523	8-759-234-77	IC TC4S66F	
		< COIL >	
L501	1-410-204-31	INDUCTOR CHIP 10uH	
L502	1-410-375-11	INDUCTOR CHIP 3.3uH	
		< TRANSISTOR >	
Q501	8-729-106-60	TRANSISTOR 2SB1115A-YQ	
Q504	8-729-900-53	TRANSISTOR DTC114EK	
Q505	8-729-106-60	TRANSISTOR 2SB1115A-YQ	
Q506	8-729-900-53	TRANSISTOR DTC114EK	
Q507	8-729-900-53	TRANSISTOR DTC114EK	
Q508	8-729-901-04	TRANSISTOR DTA114EK	
Q512	8-729-900-53	TRANSISTOR DTC114EK	
Q513	8-729-900-53	TRANSISTOR DTC114EK	
		< RESISTOR >	
R501	1-216-845-11	METAL CHIP 100K 5% 1/16W	
R502	1-216-857-11	METAL CHIP 1M 5% 1/16W	
R503	1-220-372-11	METAL GLAZE 200K 5% 1/16W	
R504	1-220-372-11	METAL GLAZE 200K 5% 1/16W	
R505	1-216-857-11	METAL CHIP 1M 5% 1/16W	
R506	1-218-448-11	METAL GLAZE 430K 5% 1/16W	
R512	1-218-347-11	METAL GLAZE 91K 5% 1/16W	
R513	1-216-845-11	METAL CHIP 100K 5% 1/16W	
R514	1-216-833-11	METAL CHIP 10K 5% 1/16W	
R515	1-216-857-11	METAL CHIP 1M 5% 1/16W	
R516	1-216-827-11	METAL CHIP 3.3K 5% 1/16W	
R517	1-216-827-11	METAL CHIP 3.3K 5% 1/16W	
R518	1-216-849-11	METAL CHIP 220K 5% 1/16W	
R519	1-216-813-11	METAL CHIP 220 5% 1/16W	
R522	1-216-800-11	METAL GLAZE 18 5% 1/16W	
R523	1-216-845-11	METAL CHIP 100K 5% 1/16W	

Ref. No.	Part No.	Description			Remark
R525	1-218-331-11	METAL GLAZE	51K	5%	1/16W
R529	1-218-272-11	METAL GLAZE	5.1K	5%	1/16W
R530	1-216-993-11	METAL GLAZE	2.4K	5%	1/16W
R531	1-218-344-11	METAL GLAZE	7.5K	5%	1/16W
R532	1-216-838-11	METAL CHIP	27K	5%	1/16W
R533	1-216-825-11	METAL CHIP	2.2K	5%	1/16W
R534	1-216-809-11	METAL CHIP	100	5%	1/16W
R535	1-216-824-11	METAL CHIP	1.8K	5%	1/16W
R536	1-216-833-11	METAL CHIP	10K	5%	1/16W
R537	1-216-833-11	METAL CHIP	10K	5%	1/16W
R538	1-216-857-11	METAL CHIP	1M	5%	1/16W
R539	1-216-833-11	METAL CHIP	10K	5%	1/16W
R540	1-216-841-11	METAL CHIP	47K	5%	1/16W
R541	1-216-833-11	METAL CHIP	10K	5%	1/16W
R544	1-216-837-11	METAL CHIP	22K	5%	1/16W
R545	1-216-845-11	METAL CHIP	100K	5%	1/16W
R546	1-216-853-11	METAL CHIP	470K	5%	1/16W
R547	1-216-846-11	METAL CHIP	120K	5%	1/16W
R548	1-216-833-11	METAL CHIP	10K	5%	1/16W
R549	1-216-848-11	METAL CHIP	180K	5%	1/16W
R550	1-216-845-11	METAL CHIP	100K	5%	1/16W
R551	1-216-845-11	METAL CHIP	100K	5%	1/16W
R552	1-216-845-11	METAL CHIP	100K	5%	1/16W
R553	1-216-838-11	METAL CHIP	27K	5%	1/16W
R554	1-216-845-11	METAL CHIP	100K	5%	1/16W
R555	1-216-829-11	METAL CHIP	4.7K	5%	1/16W
R556	1-218-273-11	METAL GLAZE	510K	5%	1/16W
R559	1-218-708-11	METAL CHIP	4.7K	0.50%	1/16W
R560	1-216-827-11	METAL CHIP	3.3K	5%	1/16W
R561	1-216-833-11	METAL CHIP	10K	5%	1/16W
R562	1-216-833-11	METAL CHIP	10K	5%	1/16W
R563	1-218-716-11	METAL CHIP	10K	0.50%	1/16W
R565	1-218-331-11	METAL GLAZE	51K	5%	1/16W
R568	1-218-272-11	METAL CHIP	5.1K	0.50%	1/16W
R569	1-216-841-11	METAL CHIP	47K	5%	1/16W
R570	1-216-845-11	METAL CHIP	100K	5%	1/16W
R572	1-216-824-11	METAL CHIP	1.8K	5%	1/16W
R573	1-216-827-11	METAL CHIP	3.3K	5%	1/16W
R574	1-216-821-11	METAL CHIP	1K	5%	1/16W
R576	1-216-841-11	METAL CHIP	47K	5%	1/16W
R577	1-216-841-11	METAL CHIP	47K	5%	1/16W
R578	1-216-841-11	METAL CHIP	47K	5%	1/16W
R579	1-216-841-11	METAL CHIP	47K	5%	1/16W
R580	1-216-809-11	METAL CHIP	100	5%	1/16W
R581	1-216-809-11	METAL CHIP	100	5%	1/16W
R583	1-216-809-11	METAL CHIP	100	5%	1/16W
R585	1-216-845-11	METAL CHIP	100K	5%	1/16W
R586	1-216-825-11	METAL CHIP	2.2K	5%	1/16W
R587	1-216-826-11	METAL CHIP	2.7K	5%	1/16W
R588	1-216-829-11	METAL CHIP	4.7K	5%	1/16W
R589	1-216-829-11	METAL CHIP	4.7K	5%	1/16W
R590	1-216-829-11	METAL CHIP	4.7K	5%	1/16W
R591	1-216-033-00	METAL CHIP	220	5%	1/10W
R592	1-216-821-11	METAL CHIP	1K	5%	1/16W
R596	1-216-841-11	METAL CHIP	47K	5%	1/16W
R599	1-216-833-11	METAL CHIP	10K	5%	1/16W
R600	1-216-033-00	METAL CHIP	220	5%	1/10W
R601	1-216-821-11	METAL CHIP	1K	5%	1/16W

< VARIABLE RESISTOR >

Ref. No.	Part No.	Description
RV510	1-238-091-11	RES, ADJ, CERMET 22K
RV517	1-238-091-11	RES, ADJ, CERMET 22K
RV518	1-238-091-11	RES, ADJ, CERMET 22K
RV521	1-238-091-11	RES, ADJ, CERMET 22K
RV528	1-238-089-11	RES, ADJ, CERMET 4.7K
RV529	1-238-089-11	RES, ADJ, CERMET 4.7K
RV542	1-238-089-11	RES, ADJ, CERMET 4.7K
RV543	1-238-089-11	RES, ADJ, CERMET 4.7K

< THERMISTOR >

Ref. No.	Part No.	Description
TH501	1-808-656-11	THERMISTOR
TH502	1-808-656-11	THERMISTOR

< VIBRATOR >

Ref. No.	Part No.	Description
X501	1-579-876-21	VIBRATOR, CRYSTAL (22MHz)
X502	1-579-871-21	VIBRATOR, CRYSTAL (55MHz)
X503	1-579-875-21	VIBRATOR, CRYSTAL (12MHz)

****

* 1-645-958-12 POWER BOARD

****

< CAPACITOR >

Ref. No.	Part No.	Description			Remark
C801	1-104-633-11	ELECT	180uF	20%	16V
C802	1-164-222-11	CERAMIC CHIP	0.22uF		25V
C803	1-104-633-11	ELECT	180uF	20%	16V
C804	1-126-926-11	ELECT	1000uF	20%	10V
C805	1-164-222-11	CERAMIC CHIP	0.22uF		25V

< CONNECTOR >

Ref. No.	Part No.	Description
* CN801	1-573-272-11	PIN, CONNECTOR 2P
* CN802	1-506-984-11	PIN, CONNECTOR (PC BOARD) 2P
* CN803	1-573-274-11	PIN, CONNECTOR 4P

< DIODE >

Ref. No.	Part No.	Description
D801	8-719-210-33	DIODE EC10DS2

POWER RELAY

Ref. No.	Part No.	Description	Remark
		< IC >	
IC801	8-759-701-75	IC NJM7805FA	
IC802	8-759-982-07	IC NJM7808FA	
		< TRANSISTOR >	
Q801	8-729-105-29	TRANSISTOR 2SA1385	
Q802	8-729-920-21	TRANSISTOR DTC314TKH04	
		< RESISTOR >	
R801	1-216-073-00	METAL CHIP 10K 5% 1/10W	
R802	1-216-206-00	METAL GLAZE 2.2K 5% 1/8W	
R803	1-216-206-00	METAL GLAZE 2.2K 5% 1/8W	
R804	1-216-206-00	METAL GLAZE 2.2K 5% 1/8W	

****

Ref. No.	Part No.	Description	Remark
*	1-646-323-11	RELAY BOARD	
		************	
		< CONNECTOR >	
CNP508	1-568-164-11	CONNECTOR, FPC (1.0MM) (ZIF)8P	
* CNP509	1-506-998-11	PIN, CONNECTOR (PC BOARD) 2P	
* CNP510	1-506-998-11	PIN, CONNECTOR (PC BOARD) 2P	
		< SWITCH >	
SW631	1-572-467-31	SWITCH, PUSH (1 KEY) (INNER L/MIT)	

****

MISCELLANEOUS
****

Ref. No.	Part No.	Description	Remark
8	1-690-946-11	CORD (WITH CONNECTOR) (ANT)	
9	1-696-624-11	CORD (WITH CONNECTOR) (AUDIO)	
11	1-696-623-11	CORD (WITH CONNECTOR)	
16	1-646-321-11	PC BOARD, FLEXIBLE (E)	
16	1-646-321-21	PC BOARD, FLEXIBLE (US,CND,AEP,G)	
65	1-466-812-11	KEY BOARD UNIT	
⚠272	8-848-271-01	DEVICE, MINIATURE DISK KMS-150A	
276	1-645-960-11	PC BOARD, SENSOR FLEXIBLE	
508	1-466-817-11	ADAPTOR, OPTICAL	
* CNP504	1-563-470-11	HOUSING, CONNECTOR 2P	
F1	1-532-419-11	FUSE, GLASS TUBE 3.15A	
F2	1-532-414-11	FUSE, GLASS TUBE 1A	
FAN1	1-541-973-11	MOTOR (FAN)	
M901	X-3365-848-2	SPINDLE MOTOR ASSY	
M902	X-3365-845-1	SLED MOTOR ASSY	
M903	X-3365-849-1	LOADING MOTOR ASSY	
S1	1-570-771-11	SWITCH	

****

The components identified by mark ⚠ or dotted line with mark. ⚠ are critical for safety. Replace only with part number specified.	Les composants identifiés par une marque ⚠ sont critiques pour la sécurité. Ne les remplacer que par une pièce portant le numéro spécifié.

ACCESSORIES & PACKING MATERIALS
****

Ref. No.	Part No.	Description	Remark
	X-3365-862-1	CASE ASSY	
	1-466-818-11	REMOTE COMMANDER (RM-X27) (AEP,G)	
	1-466-818-31	REMOTE COMMANDER (RM-X27) (US,CND,E)	
*	3-355-207-01	CARDBOARD (E)	
*	3-385-591-01	INDIVIDUAL CARTON (US,CND,E)	
*	3-385-593-01	CUSHION (UPPER)	
*	3-385-594-01	CUSHION (LOWER)	
*	3-385-915-01	INDIVIDUAL CARTON (AEP,G)	
	3-756-009-11	MANUAL, INSTRUCTION (ENGLISH, FRENCH, GERMAN, ITALIAN, DUTCH) (AEP, G)	
	3-756-009-21	MANUAL, INSTRUCTION (ENGLISH, FRENCH) (US, CND)	
	3-756-009-41	MANUAL, INSTRUCTION (SPANISH, SWEDISH, PORTUGUESE) (AEP)	
	3-756-009-51	MANUAL, INSTRUCTION (ENGLISH, SPANISH, CHINESE) (E)	
	3-756-010-11	MANUAL, INSTRUCTION, INSTALL (ENGLISH, FRENCH, GERMAN, ITALIAN, DUTCH) (AEP, G)	
	3-756-010-21	MANUAL, INSTRUCTION, INSTALL (ENGLISH, FRENCH) (US,CND)	
	3-756-010-41	MANUAL, INSTRUCTION, INSTALL (SPANISH, SWEDISH, PORTUGUESE) (AEP)	
	3-756-010-51	MANUAL, INSTRUCTION, INSTALL (ENGLISH, SPANISH, CHINESE) (E)	

****

****
HARDWARE LIST
****

Ref. No.	Part No.	Description	Remark
#1	7-621-773-95	SCREW +PTT 2.6X6 (S)	
#2	7-621-772-10	SCREW +B 2X4	
#3	7-621-773-86	SCREW +PTT 2.6X4 (S)	
#4	7-627-853-57	PRECISION SCREW +P 2X5 TYPE3	
#5	7-621-770-67	SCREW +PTT 2.6X6 (S)	
#6	7-621-773-87	SCREW +PTT 2.6X10 (S)	
#7	7-621-775-78	SCREW +P 2.6X14	
#8	7-685-105-19	SCREW +P 2X8 TYPE2 NON-SLIT	
#11	7-627-852-68	SCREW, PRECISION +P 1.7X6 TYPE3	
#12	7-621-555-10	SCREW +K 2X3	
#13	7-621-772-08	SCREW +B 2X3	
#14	7-624-101-01	STOP RING 1.2 (E TYPE)	
#15	7-627-551-58	SCREW, PRECISION +P 1.4X3	
#16	7-627-552-87	SCREW, PRECISION +P 1.7X2.2	
#17	7-627-554-07	SCREW, PRECISION +P 2X2.2	
#18	7-627-852-28	+P 1.7X3	
#19	7-627-852-37	PRECISION SCREW +P1.7X1.8TYPE3	
#20	7-627-850-27	SCREW, PRECISION +P 1.4X3	

****

Ref. No.	Part No.	Description	Remark
		• MOUNTING HARDWARE	
501	3-323-219-01	FRAME, FITTING	
502	3-374-200-01	SPRING (FITTING)	
503	3-385-928-01	COLLAR	
504	3-329-814-01	SCREW (M4X6), SPECIAL PAN (+)	
505	3-323-209-01	BOLT (4-5), STUD	
506	3-323-210-01	ADJUSTOR, STUD BOLT	
507	3-349-410-01	BUSHING	
508	1-466-817-11	ADAPTOR, OPTICAL	

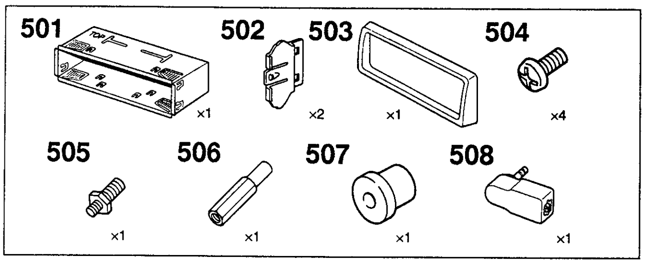

9-957-636-11

Sony Corporation
Mobile Electronics Group

English
92L0579-1
Printed in Japan
© 1992. 12
Published by Audio Corporate Planning Group

MDX-U1/U1RDS

SONY
SERVICE MANUAL

US Model
Canadian Model
E Model
MDX-U1
AEP Model
MDX-U1RDS

SUPPLEMENT-1

File this supplement with the service manual.

Subject:
- **Disassembly.**
- **Adjustments.**
- **Keyboard unit Diagram.**
- **Keyboard unit Electrical Parts List.**

SECTION 1
DISASSEMBLY

MD BLOCK

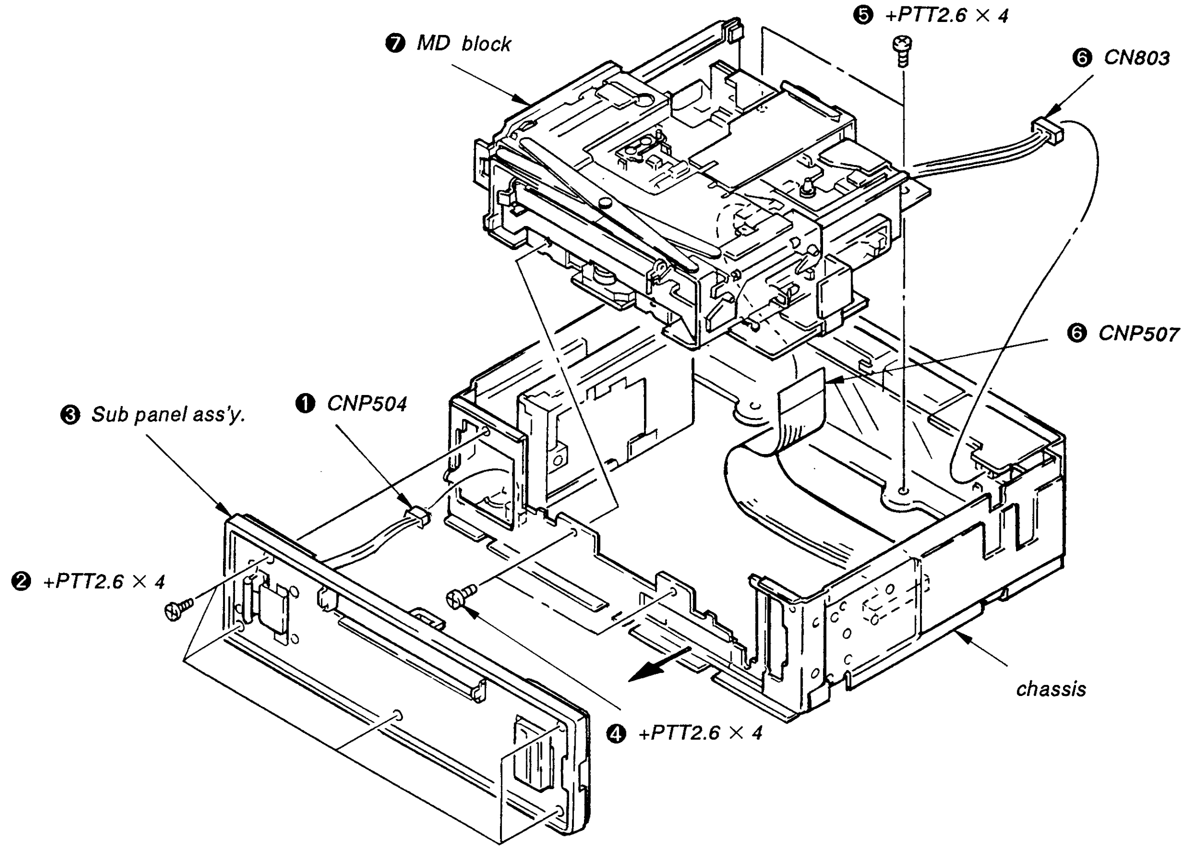

SECTION 2
ADJUSTMENTS

2-1. TEST MODE

Make the Test Mode.
1. Set the "OFF" condition.
2. Push [4] button.
3. Push [5] button.
4. Press [1] button for two seconds.
   Then the display indicates 4 patterns and stops,
   The test mode is set.

2-2. TUNER SECTION

AM (MW) Auto Scan/Stop Level Adjustment

Setting:
BAND switch : AM or MW

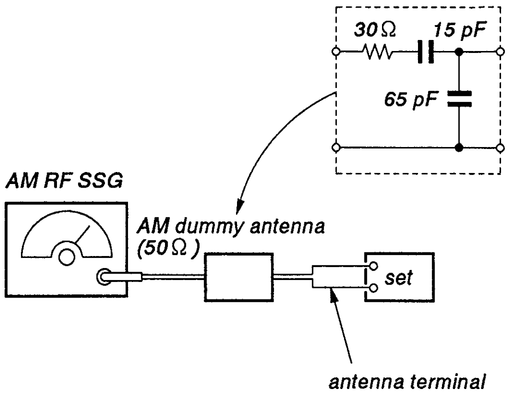

Frequency:	*1,000 kHz (US/Canadian/E)*
	999 kHz (AEP/UK/E/G)
Output level:	*30 dB μV (31.8 μV)*

Procedure:
1. Set to the test mode. (See left.)
2. Push the tuner button and set to AM (MW).

Display window (EX.: 2 band model 9 kHz step when 10 kHz step; 530)

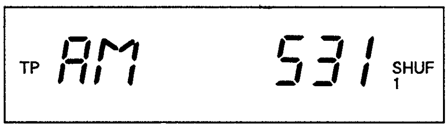

3. Push the preset [3] button.

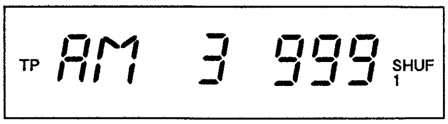

(EX.: 2 band model 9 kHz step, when 10 kHz step; 1000)

4. Adjust with the volume on TU10 so that the "AM (or MW)" indication turns to "AM0 (or MW0)" indication on the display window.

FM Auto Scan/Stop Level Adjustment

Setting:

BAND switch : FM

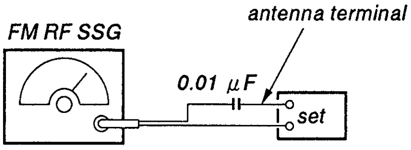

Carrier frequency:	*97.9 MHz (US/Canadian)* *98.0 MHz (AEP/UK/E/G)*
Output level:	*25 dB (18 µV) (Except RDS model)* *22 dB (13 µV) (RDS model)*
Mode:	*mono: unmodulated*

Procedure:

1. Set to the test mode. (See page left.)
2. Push the tuner button and set to FM.

Display window (EX.: AEP, UK, E, G model.
US, Canadian model; 87.9)

3. Push the preset [3] button.

(EX.: AEP, UK, E, G model.
US, Canadian model; 97.9)

4. Adjust with the volume on TU10 so that the "FM" indication turns to "FM0" indication on the display window.

S Meter (35dB) Adjustment

Setting:

BAND switch : FM

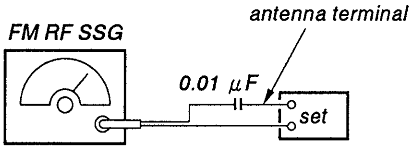

Carrier frequency:	*97.9 MHz (US/Canadian)* *98.0 MHz (AEP/UK/E/G)*
Output level:	*35 dB (56.2 µV) (Except RDS model)* *32 dB (39.8 µV) (RDS model)*
Mode:	*1kHz: unmodulated*

Procedure:

1. Adjust with RV9 so that the voltage on TP S meter (35dB)goes 2.0 ± 0.1V(except RDS model), Vref × 0.375 $\pm^{0.2}_{0}$ V(RDS model).
   Vref :Voltage on Pin ㊽ of IC601.

S Meter (70dB) Adjustment

Setting:

BAND switch : FM

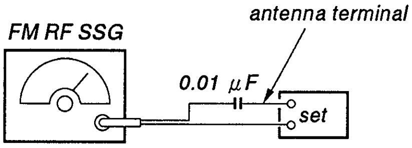

Carrier frequency:	*97.9 MHz (US/Canadian)* *98.0 MHz (AEP/UK/E/G)*
Output level:	*70 dB (3.15mV)*
Mode:	*1kHz 75 deviation*

Procedure:

1. Adjust with RV2 so that the voltage on TP S meter (70dB) goes 4.5 $\pm^{0.2}_{0.5}$V.

FM Stereo Separation (4dB) Adjustment

Setting:

BAND switch : FM

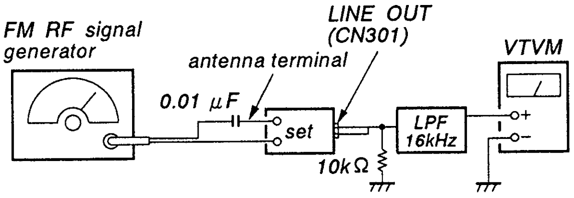

Carrier frequency: *97.9 MHz (US/Canadian)*
98.0 MHz (AEP/UK/E/G)
Output level: *40 dB (100 μV)*
Mode: *stereo*
Modulation: *main; 1 kHz, 33.75 kHz deviation (45%)*
sub; 1 kHz, 33.75 kHz deviation (45%)
19 kHz pilot; 7.5 kHz deviation (10%)

Procedure:

1. Adjust with RV6 so that the LINE OUT level goes 9 ± 1dB.

FM Stereo Separation (70dB) Adjustment

Setting:

BAND switch : FM

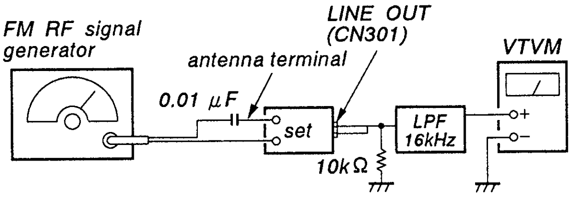

Carrier frequency: *97.9 MHz (US/Canadian)*
98.0 MHz (AEP/UK/E/G)
Output level: *70 dB (3.15mV)*
Mode: *stereo*
Modulation: *main; 1 kHz, 33.75 kHz deviation (45%)*
sub; 1 kHz, 33.75 kHz deviation (45%)
19 kHz pilot; 7.5 kHz deviation (10%)

Procedure:

1. Adjust with RV4 to the best separation

FM stereo signal generator output channel	VTVM connection	VTVM reading (dB)
L-CH	L-CH	(A)
R-CH	L-CH	(B) Adjust RV2 for minimum reading.
R-CH	R-CH	(C)
L-CH	R-CH	(D) Adjust RV2 for minimum reading.

L-CH Stereo separation: (A) − (B)
R-CH Stereo separation: (C) − (D)
The separations of both channels should be equal.
Adjustment Value : − 28dB

Adjustment Location: MAIN board

FM Carrier Leak Adjustment

Setting:

BAND switch : FM

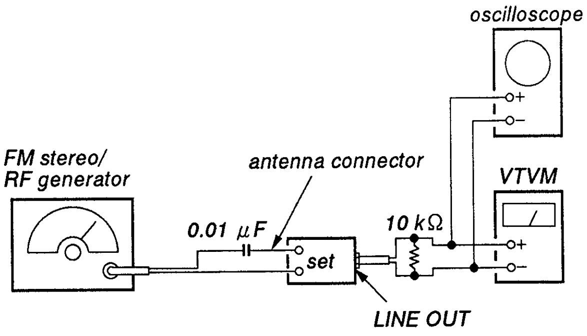

Carrier frequency: *97.9 MHz (US/Canadian)*
98.0 MHz (AEP/UK/E/G)
Output level: *70 dB μV (3.15 mV)*
Modulation : *main; 1 kHz, 33.75 kHz deviation*
sub; 1 kHz, 33.75 kHz deviation
19 kHz pilot; 7.5 kHz deviation

Procedure:

1. Check the waveform on the oscilloscope screen becomes as follows when turning RV3.

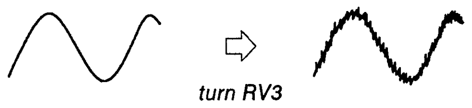

2. Set the modulation 19 kHz pilot only.
3. Adjust with RV3 so that the 19 kHz signal becomes minimum on both channels L and R.

2-3. MD SECTION

Preparation before Starting Adjustments

1. Put the unit in TEST mode. (See page 2.)
2. Press [MD], and the illumination turns on.
   Press [4] (STOP) to put the unit in STOP mode.
   Under this condition, the functions of each key are set as follows:
   [1] = FOCUS ON
   [2] = TRACKING ON
   [3] = LASER ON
   [4] = STOP
   [◀◀ DISC ▶▶] =SLED RVS/FWD
   [◀◀ AMS ▶▶] =AMS ± (Only for PLAY mode)
   [OFF]=RESET (REST MODE RELEASE)
3. Set the DISC in position. "SHUF 1" is lit. Be careful with automatic setting of "VOL MAX PLAY".
4. Setting [1] → [2] put the unit into PLAY mode without reproducing sound.
   In normal (with sound reproduced)·PLAY mode, the data is retrieved intermittently. In this (muted) PLAY mode however, an eye pattern of continuous data retrieval can be observed on an oscilloscope. If sound reproduction is desired, setting [FM] → [MD] plays back a sound of "VOL MAX PLAY".
5. Adjustments shall be carried out in TEST mode in order of the adjustment sections that follow this preparation section.

Laser Power Adjustment

There are two methods as follows:

- Method by using a laser power wattmeter
  Press [3] to turn on the laser diode.
  Adjust the position of the optical block with the [◀◀ DISC ▶▶] key.
  Adjust RV529 for a laser output of 820 ± 5 μW at 780 nm.
- Method by observing an eye pattern
  Set a premaster DISC in position.
  Put the unit in PLAY mode.
  Adjust RV529 for an eye pattern of 1.5 Vp-p.

FOK OFFSET Adjustment

Connect a VOM between pin ① (VR) and pin ㉝ (ABCD) of IC502.
Press [3] (LASER ON), and adjust RV510 for − 200 ± 50 mV on the VOM.
Press [4] (STOP).

TRACKING OFFSET Adjustment

Connect the VOM between pin ① (VR) and pin ㉔ (TE) of IC502.
Press [3] (LASER ON), and adjust RV521 for 0 ± 50 mV on the VOM.
Press [4] (STOP).

E-F BALANCE Adjustment

Connect the VOM between pin ① (VR) and pin ㉔ (TE) of IC502.Set the premaster DISC in position.
Press [4] (STOP) before putting the unit in PLAY mode.
Move the optical block once to the most inside of the DISC with [◀◀ DISC], and then press [DISC ▶▶] once.
Press [1] (FOCUS ON), and adjust RV528 for 0 ± 100 mV on the VOM.
(Use a digital VOM for reading a level within 0 ± 100 mV.)
Remove the premaster DISC from the unit.

FOCUS BIAS Adjustment for Record/Playback Type DISC

Connect the VOM between pin ① (VR) and pin ㉒ (FE) of IC502.
Press [3] (LASER ON), and adjust RV518 for −200 ± 10 mV on VOM.
Press [4] (STOP).

FOCUS BIAS Adjustment for Playback Only Type DISC

Connect the VOM between pin ① (VR) and pin ㉒ (FE) of IC502.
Set the unit in quasi DISC loaded condition without a DISC, by pushing loader (R) Ⓑ while holding stopper Ⓐ lifted slightly upward.
Press [4] (STOP) before the unit goes into EJECT mode with its display indicating an error condition.
Press [3] (LASER ON) while holding [SW632] (DISC type detector) pressed with the finger.
Adjust RV517 for 0 ± 10 mV on the VOM.
Press [4] (STOP).

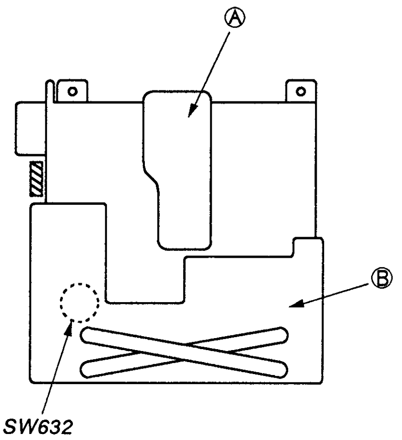

FOCUS/TRACKING GAIN Adjustments

Set both RV542 and RV543 where turned clockwise by 45 degrees, as shown below.

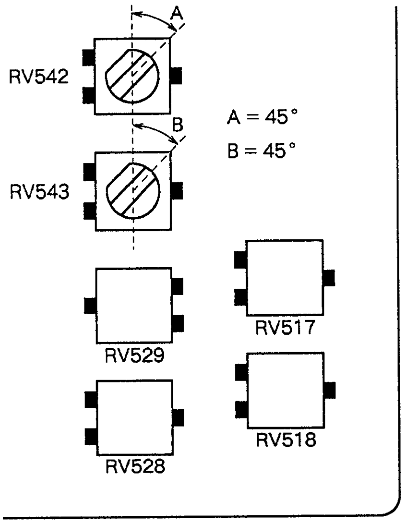

1. FOCUS GAIN Adjustment

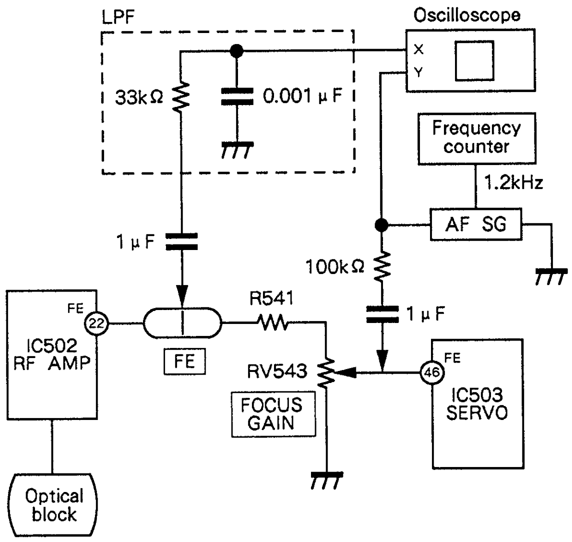

(Waveforms observed on the oscilloscope)

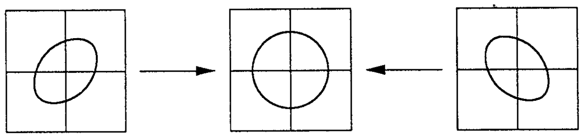

(a) Gain is too low. *(b) Gain is appropriate.* *(a) Gain is too high.*

Play back an MO disk, and then adjust RV543 so that the waveform observed on the oscilloscope is symmetrical to the vertical line at the center, as shown in (b) in the figure.

2. TRACKING GAIN Adjustment

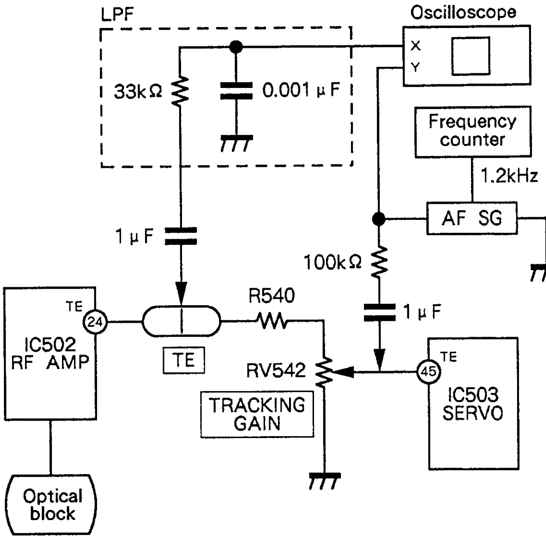

(Waveforms observed on the oscilloscope)

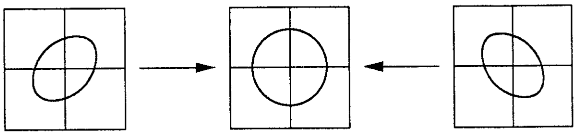

(a) Gain is too low. *(b) Gain is appropriate.* *(a) Gain is too high.*

Play back the MO disk, and then adjust RV542 so that the waveform observed on the oscilloscope is symmetrical to the vertical line at the center, as shown in (b) in the figure.

Description of ERROR Indication in MD Mode

A functional error of the unit is displayed as "ERR – n1n2n3n4".
Items indicated with "n3" and "n4" mean nothing in particular.
The list below shows the error items indicated with "n1" and "n2".

n1	n2	Description
1	*	● Servo control error
	1	● Focusing error → • Focusing is not achieved in MD PLAY mode. • A condition of FOK = "L" continues for 80 ms in MD PLAY mode, and all servo circuits are deactivated. Focusing is failed again after AGC is turned off.
	2	● GFS or LOCK error → • GFS is not activated in four seconds after setting to CLV-A with focusing achieved successfully. Or, focusing is deactivated once after that time, but it is not achieved again. • When a condition of GFS = "L" continues for 2 seconds in MD PLAY mode, CLV/TRACKING/SLED servo loops are set open once. Then, the servo loops are closed again after 600 ms from that time, by moving the sled for 50 ms for the MO DISK (no movement of the sled for the premaster DISK). However, GFS is not activated in four seconds. • When the servo circuits are not locked for 100 ms, TRACKING/SLED servo loops are set open once. Then, the servo loops are closed again, waiting for GFS to be activated. However, GFS is not activated in four seconds from that time.
	3	● SUB-Q error → When SUB-Q (for the premaster DISC) or ADIP (for the MO DISC) cannot be retrieved for four seconds, all servo circuits are deactivated once. After 600 ms from that time, the focusing servo circuit is activated. However, the focusing is not achieved.
	4	● SYNC error → When SYNC is not detected for 3.5 seconds, TRACKING servo circuit is deactivated once, and the sled is moved to the inside for 150 ms. Then, TRACK/SLED servo circuits are activated again. However, focusing is not achieved this time.
	F	● NG DISC → A HYBRID DISC is loaded.
D	*	● HIGH TEMPERATURE error
F	*	● Control error on the mechanisms of the deck.
	1	● EJECT time-out error When time for loading (7 seconds allowed as maximum) is over, eject operation is started. However, time for eject operation is also over (5 seconds allowed as maximum).
	8	● LOAD time-out error When time for eject operation (5 seconds allowed as maximum) is over, loading is started. However, time for loading is also over (7 seconds allowed as maximum).
	9	● Repetitive time-out error When time for eject operation (5 seconds allowed as maximum) is over, loading is started. But, the unit repeats eject operation. However, eject operation failed finally after the unit is tried eject operation three times (the DISC is chucked in this case).

- **Adjusting Parts Location**

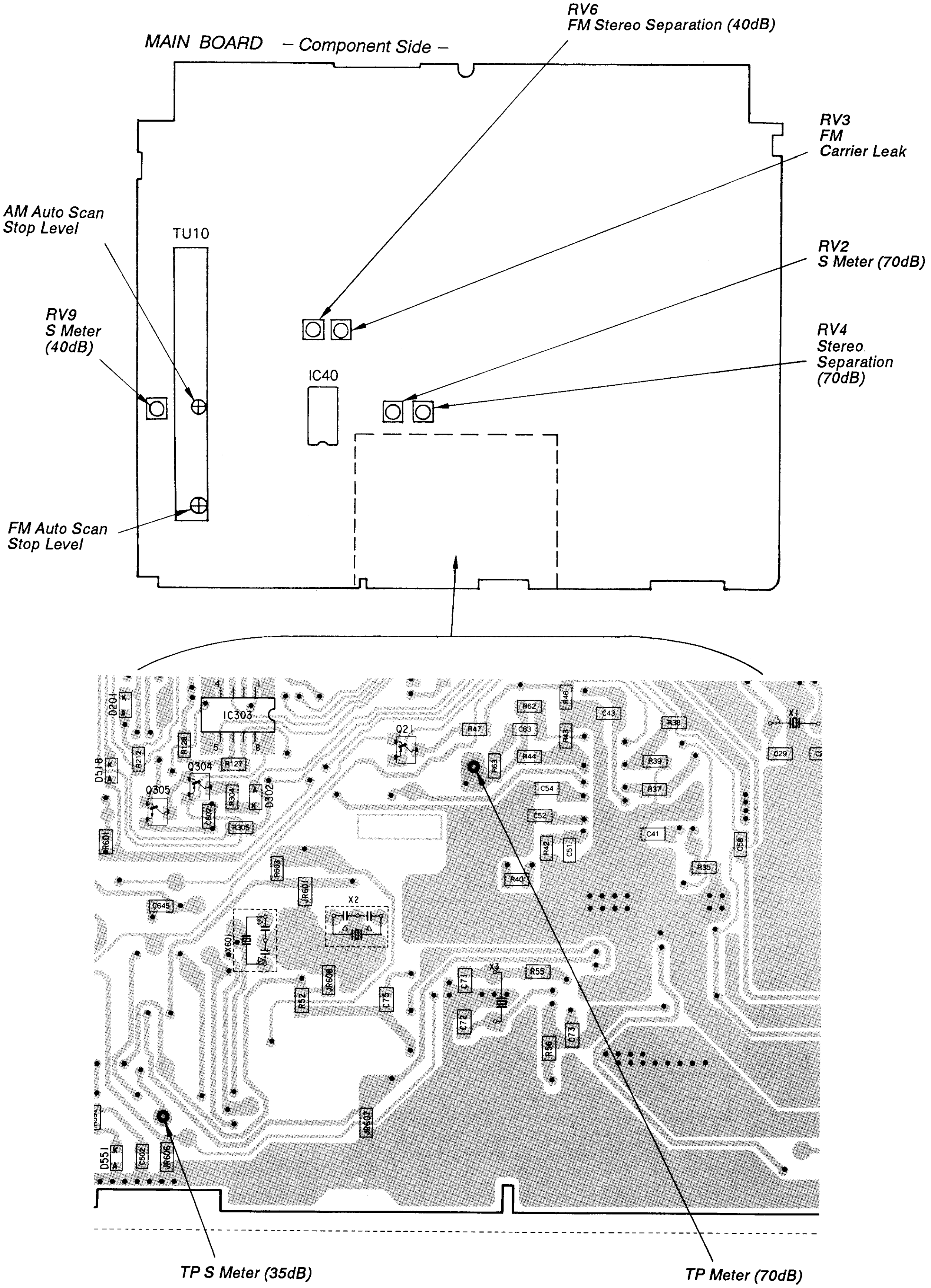

MD SERVO BOARD – Component Side –

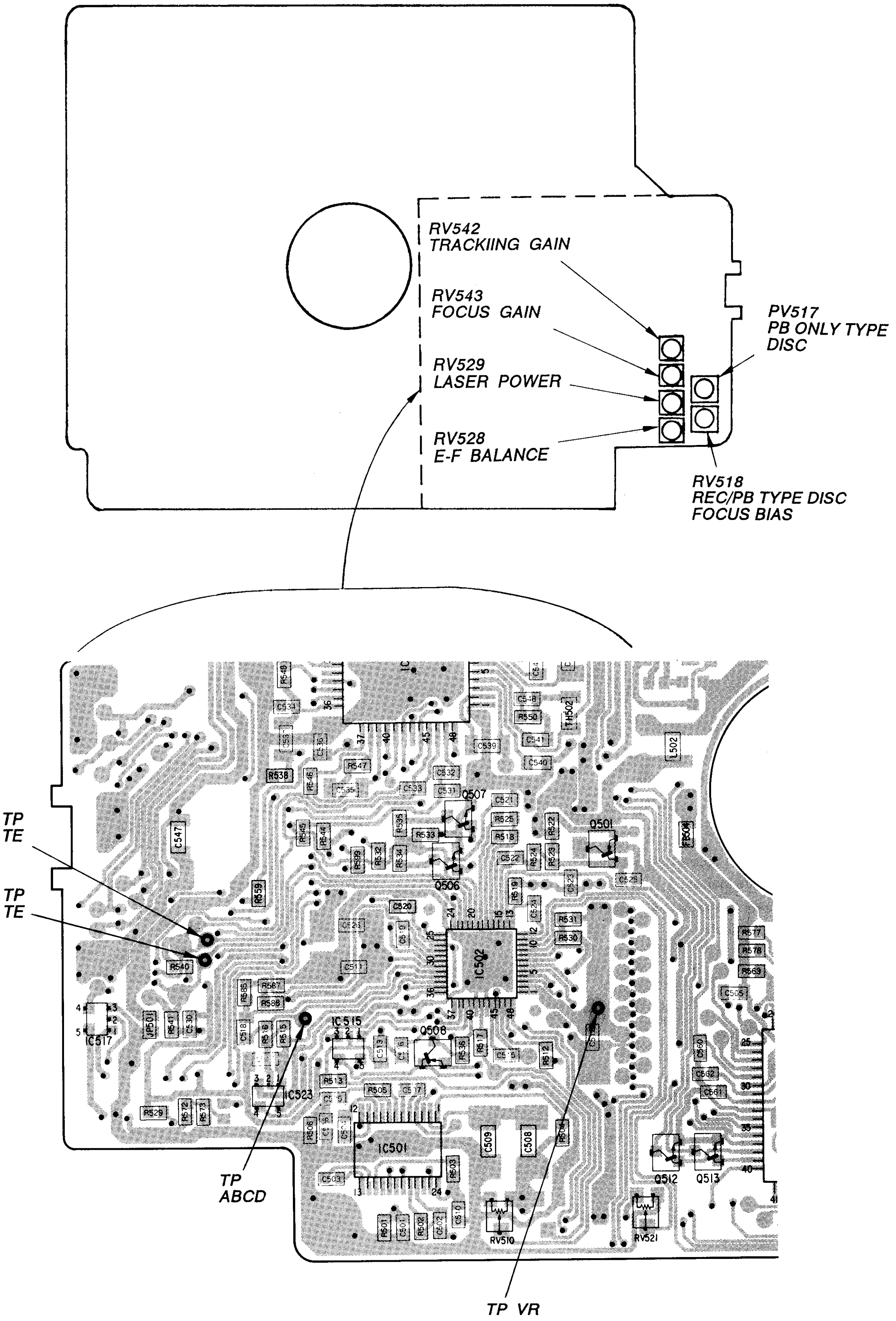

SECTION 3
KEYBOARD UNIIT DIAGRAMS

• Semiconductor Location

Ref. No.	Location	Ref. No.	Location
D1	B-10	LED14	I-4
D2	C-10	LED15	I-6
		LED16	I-7
IC1	B-5	LED17	I-8
IC2	G-11	LED18	I-10
		LED19	I-10
LED1	G-13	LED20	I-12
LED2	H-13	LED21	G-10
LED3	I-13	LED22	G-11
LED4	F-2	LED23	G-11
LED5	F-4	LED24	H-10
LED6	F-10	LED25	H-11
LED7	G-13	LED26	H-11
LED8	F-11	LED27	F-3
LED9	G-1		
LED10	H-1	TR1	B-8
LED11	I-1	TR2	C-10
LED12	I-2	TR3	D-10
LED13	I-3		

Note on Printed Wiring Board:
- ● : Through hole.
- ░░░ : Pattern from the side which enables seeing.

(The other layers' patterns are not indicated.)

Caution:	
Pattern face side: (Conductor Side)	Parts on the pattern face side seen from the pattern face are indicated.
Parts face side: (Component Side)	Parts on the parts face side seen from the parts face are indicated.

Note on Schematic Diagram:
- All capacitors are in μF unless otherwise noted. pF: μμF 50 WV or less are not indicated except for electrolytics and tantalums.
- All resistors are in Ω and ¼ W or less unless otherwise specified.
- [B+] : B + Line.
- [ ] : panel designation.
- Voltages and waveforms are dc with respect to ground under no-signal (detuned) conditions.
- Voltages are taken with a VOM (10 MΩ/V).
  Voltage variations may be noted due to normal production tolerances.

3-1. PRINTED WIRING BOARD

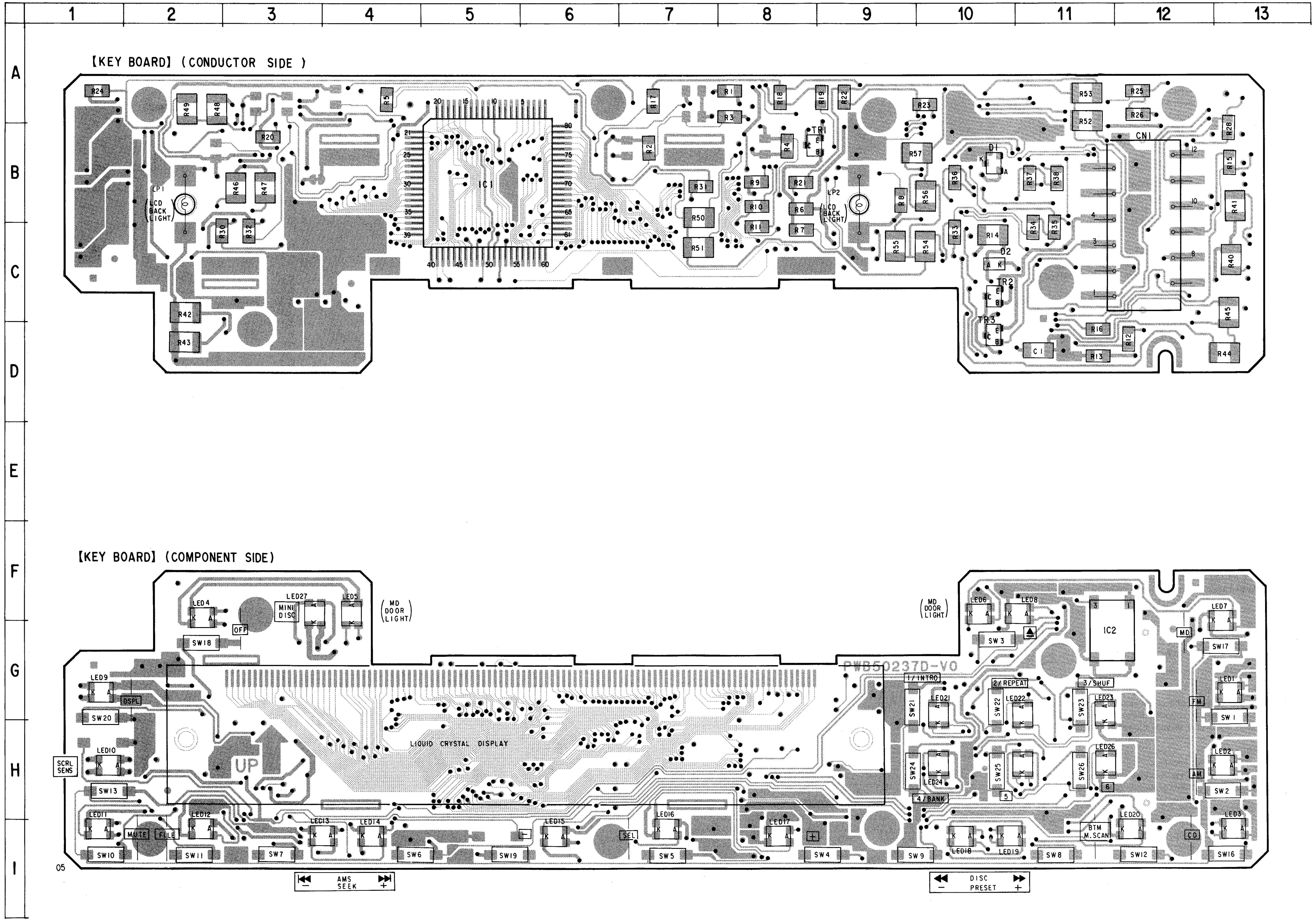

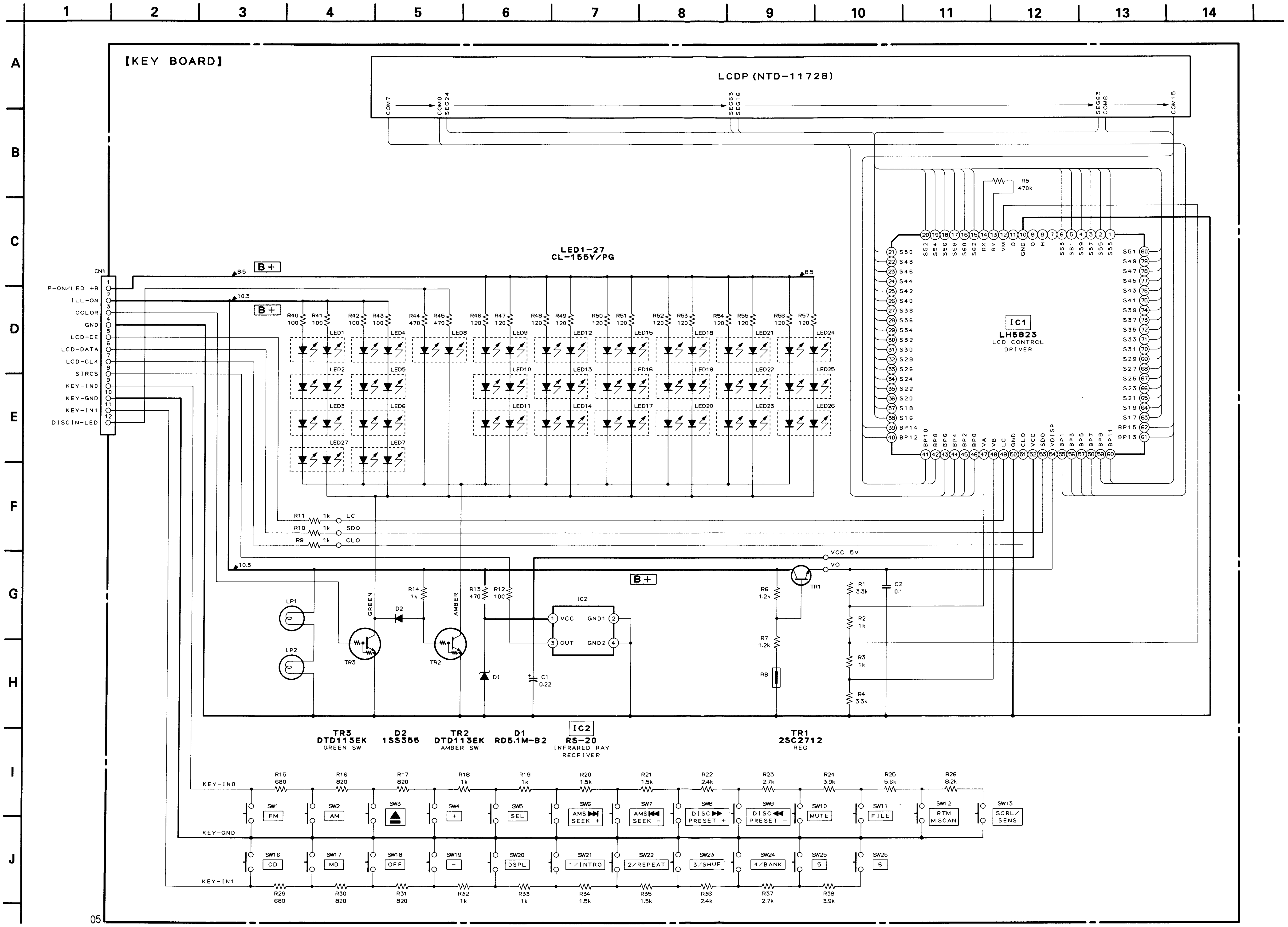
[KEY BOARD]
LCDP (NTD-11728)
LED1-27
CL-155Y/PG
IC1
LH5823
LCD CONTROL
DRIVER
CN1
P-ON/LED +B
ILL-ON
COLOR
GND
LCD-CE
LCD-DATA
LCD-CLK
SIRCS
KEY-IN0
KEY-GND
KEY-IN1
DISCIN-LED
B+
VCC 5V
VO
IC2
VCC
OUT
GND1
GND2
TR3
DTD113EK
GREEN SW
D2
1SS355
TR2
DTD113EK
AMBER SW
D1
RD5.1M-B2
IC2
RS-20
INFRARED RAY
RECEIVER
TR1
2SC2712
REG
FM
AM
SEL
AMS SEEK +
AMS SEEK -
DISC PRESET +
DISC PRESET -
MUTE
FILE
BTM M.SCAN
SCRL/ SENS
CD
MD
OFF
DSPL
1/INTRO
2/REPEAT
3/SHUF
4/BANK
5
6

SECTION 4
KEYBOARD UNIIT ELECTRICAL PARTS LIST

NOTE:

- Due to standardization, replacements in the parts list may be different from the parts specified in the diagrams or the components used on the set.
- -XX and -X mean standardized parts, so they may have some difference from the original one.
- RESISTORS
  All resistors are in ohms.
  METAL: Metal-film resistor
  METAL OXIDE: Metal Oxide-film resistor
  F: nonflammable
- Items marked "＊" are not stocked since they are seldom required for routine service. Some delay should be anticipated when ordering these items.
- SEMICONDUCTORS
  In each case, u: μ, for example:
  uA...: μA..., uPA...: μPA...,
  uPB...: μPB..., uPC...: μPC...,
  uPD...: μPD...
- CAPACITORS
  uF: μF
- COILS
  uH: μH

When including parts by reference number, please include the board name.

Ref. No.	Part No.	Description				Remark
		KEYBOARD BOARD				
		**************				
		< CAPACITOR >				
C1	1-164-299-11	CERAMIC	0.22	10%	25V	
C2	1-164-004-11	CERAMIC	6.1	10%	25V	
		< CONNECTOR >				
CN1	1-691-557-11	CONNECTOR 2P				
		< DIODE >				
D1	8-719-105-82	ZENER RD5.1MB2				
D2	8-719-988-62	DIODE 1SS355				
		< IC >				
IC1	8-759-156-11	IC LH5823P2				
IC2	8-759-515-60	IC RS-20				
		< LED >				
LED1	8-719-987-45	LED CL-155Y/PG				
LED2	8-719-987-45	LED CL-155Y/PG				
LED3	8-719-987-45	LED CL-155Y/PG				
LED4	8-719-987-45	LED CL-155Y/PG				
LED5	8-719-987-45	LED CL-155Y/PG				
LED6	8-719-987-45	LED CL-155Y/PG				
LED7	8-719-987-45	LED CL-155Y/PG				
LED8	8-719-987-45	LED CL-155Y/PG				
LED9	8-719-987-45	LED CL-155Y/PG				
LED10	8-719-987-45	LED CL-155Y/PG				
LED11	8-719-987-45	LED CL-155Y/PG				
LED12	8-719-987-45	LED CL-155Y/PG				
LED13	8-719-987-45	LED CL-155Y/PG				
LED14	8-719-987-45	LED CL-155Y/PG				
LED15	8-719-987-45	LED CL-155Y/PG				
LED16	8-719-987-45	LED CL-155Y/PG				
LED17	8-719-987-45	LED CL-155Y/PG				
LED18	8-719-987-45	LED CL-155Y/PG				
LED19	8-719-987-45	LED CL-155Y/PG				
LED20	8-719-987-45	LED CL-155Y/PG				
LED21	8-719-987-45	LED CL-155Y/PG				
LED22	8-719-987-45	LED CL-155Y/PG				
LED23	8-719-987-45	LED CL-155Y/PG				
LED24	8-719-987-45	LED CL-155Y/PG				
LED25	8-719-987-45	LED CL-155Y/PG				
LED26	8-719-987-45	LED CL-155Y/PG				
LED27	8-719-987-45	LED CL-155Y/PG				
		< LAMP >				
LP1	1-517-145-11	PILOT LAMP				
LP1	1-517-145-11	PILOT LAMP				
		< RESISTOR >				
R1	1-216-061-00	METAL CHIP	3.3K	5%	1/10W	
R2	1-216-049-00	METAL CHIP	1K	5%	1/10W	
R3	1-216-049-00	METAL CHIP	1K	5%	1/10W	
R4	1-216-061-00	METAL CHIP	3.3K	5%	1/10W	
R5	1-216-113-00	METAL CHIP	470K	5%	1/10W	

REVISED

Ref.No.	Part No.	Description				Remark
R6	1-216-051-00	METAL CHIP	1.2K	5%	1/10W	
R7	1-216-051-00	METAL CHIP	1.2K	5%	1/10W	
R8	1-809-998-11	THERMISTOR CHIP				
R9	1-216-049-00	METAL CHIP	1K	5%	1/10W	
R10	1-216-049-00	METAL CHIP	1K	5%	1/10W	
R11	1-216-049-00	METAL CHIP	1K	5%	1/10W	
R12	1-216-025-00	METAL CHIP	100	5%	1/10W	
R13	1-216-041-00	METAL CHIP	470	5%	1/10W	
R14	1-220-264-11	METAL CHIP	1K	5%	1/4W	
R15	1-216-647-11	METAL CHIP	680	5%	1/10W	
R16	1-216-649-11	METAL CHIP	820	5%	1/10W	
R17	1-216-649-11	METAL CHIP	820	5%	1/10W	
R18	1-216-651-11	METAL CHIP	1K	5%	1/10W	
R19	1-216-651-11	METAL CHIP	1K	5%	1/10W	
R20	1-216-655-11	METAL CHIP	1.5K	5%	1/10W	
R21	1-216-655-11	METAL CHIP	1.5K	5%	1/10W	
R22	1-216-660-11	METAL CHIP	2.4K	5%	1/10W	
R23	1-216-661-11	METAL CHIP	2.7K	5%	1/10W	
R24	1-216-665-11	METAL CHIP	3.9K	5%	1/10W	
R25	1-216-669-11	METAL CHIP	5.6K	5%	1/10W	
R26	1-216-673-11	METAL CHIP	8.2K	5%	1/10W	
R29	1-216-647-11	METAL CHIP	680	5%	1/10W	
R30	1-216-649-11	METAL CHIP	820	5%	1/10W	
R31	1-216-649-11	METAL CHIP	820	5%	1/10W	
R32	1-216-651-11	METAL CHIP	1K	5%	1/10W	
R33	1-216-651-11	METAL CHIP	1K	5%	1/10W	
R34	1-216-655-11	METAL CHIP	1.5K	5%	1/10W	
R35	1-216-655-11	METAL CHIP	1.5K	5%	1/10W	
R36	1-216-660-11	METAL CHIP	2.4K	5%	1/10W	
R37	1-216-661-11	METAL CHIP	2.7K	5%	1/10W	
R38	1-216-665-11	METAL CHIP	3.9K	5%	1/10W	
R40	1-220-258-11	METAL CHIP	120	5%	1/4W	
R41	1-220-258-11	METAL CHIP	120	5%	1/4W	
R42	1-220-258-11	METAL CHIP	120	5%	1/4W	
R43	1-220-258-11	METAL CHIP	120	5%	1/4W	
R44	1-220-261-11	METAL CHIP	470	5%	1/4W	
R45	1-220-261-11	METAL CHIP	470	5%	1/4W	
R46	1-220-239-11	METAL CHIP	120	5%	1/4W	
R47	1-220-239-11	METAL CHIP	120	5%	1/4W	
R48	1-220-239-11	METAL CHIP	120	5%	1/4W	
R49	1-220-239-11	METAL CHIP	120	5%	1/4W	
R50	1-220-239-11	METAL CHIP	120	5%	1/4W	
R51	1-220-239-11	METAL CHIP	120	5%	1/4W	
R52	1-220-239-11	METAL CHIP	120	5%	1/4W	
R53	1-220-239-11	METAL CHIP	120	5%	1/4W	
R54	1-220-239-11	METAL CHIP	120	5%	1/4W	
R55	1-220-239-11	METAL CHIP	120	5%	1/4W	
R56	1-220-239-11	METAL CHIP	120	5%	1/4W	
R57	1-220-239-11	METAL CHIP	120	5%	1/4W	

< SWITCH >

Ref.No.	Part No.	Description	Remark
SW1	1-692-037-31	SWITCH (FM)	
SW2	1-692-037-31	SWITCH (AM)	
SW3	1-692-037-31	SWITCH (▲)	
SW4	1-692-037-31	SWITCH (+)	
SW5	1-692-037-31	SWITCH (SEL)	
SW6	1-692-037-31	SWITCH (AMS ▶▶|/SEEK +)	
SW7	1-692-037-31	SWITCH (AMS |◀◀/SEEK -)	
SW8	1-692-037-31	SWITCH (DISC ▶▶/SEEK +)	
SW9	1-692-037-31	SWITCH (DISC ◀◀/SEEK +)	
SW10	1-692-037-31	SWITCH (MUTE)	
SW11	1-692-037-31	SWITCH (FILE)	
SW12	1-692-037-31	SWITCH (BTM/M. SCAN)	
SW13	1-692-037-31	SWITCH (SCRL/SENS)	
SW16	1-692-037-31	SWITCH (CD)	
SW17	1-692-037-31	SWITCH (MD)	
SW18	1-692-037-31	SWITCH (OFF)	
SW19	1-692-037-31	SWITCH (-)	
SW20	1-692-037-31	SWITCH (DSPL)	
SW21	1-692-037-31	SWITCH (1/INTRO)	
SW22	1-692-037-31	SWITCH (2/REPEAT)	
SW23	1-692-037-31	SWITCH (3/SHUF)	
SW24	1-692-037-31	SWITCH (4/BANK)	
SW25	1-692-037-31	SWITCH (5)	
SW26	1-692-037-31	SWITCH (6)	

< TRANSISTOR >

Ref.No.	Part No.	Description	Remark
TR1	8-729-230-50	TRANSISTOR 2SC2712-YG	
TR2	8-729-904-66	TRANSISTOR DTD113EK	
TR3	8-729-904-66	TRANSISTOR DTD113EK	

English
93C0576-1
Printed in Japan
© 1993. 3

9-957-636-81
(Including 9-957-636-91)

Sony Corporation
Mobile Electronics Group

Published by Audio Corporate Planning Group

MDX-U1/U1RDS

SONY®
SERVICE MANUAL

US Model
Canadian Model
E Model
MDX-U1
AEP Model
MDX-U1RDS

SUPPLEMENT-2

File this supplement with the service manual.

Subject:
1. **Disassembly**
   (FLOAT BLOCK ASSY, CHASSIS (OP) BLOCK ASSY)
2. **Correction of adjustments**

1. Disassembly

• Float Block Assy

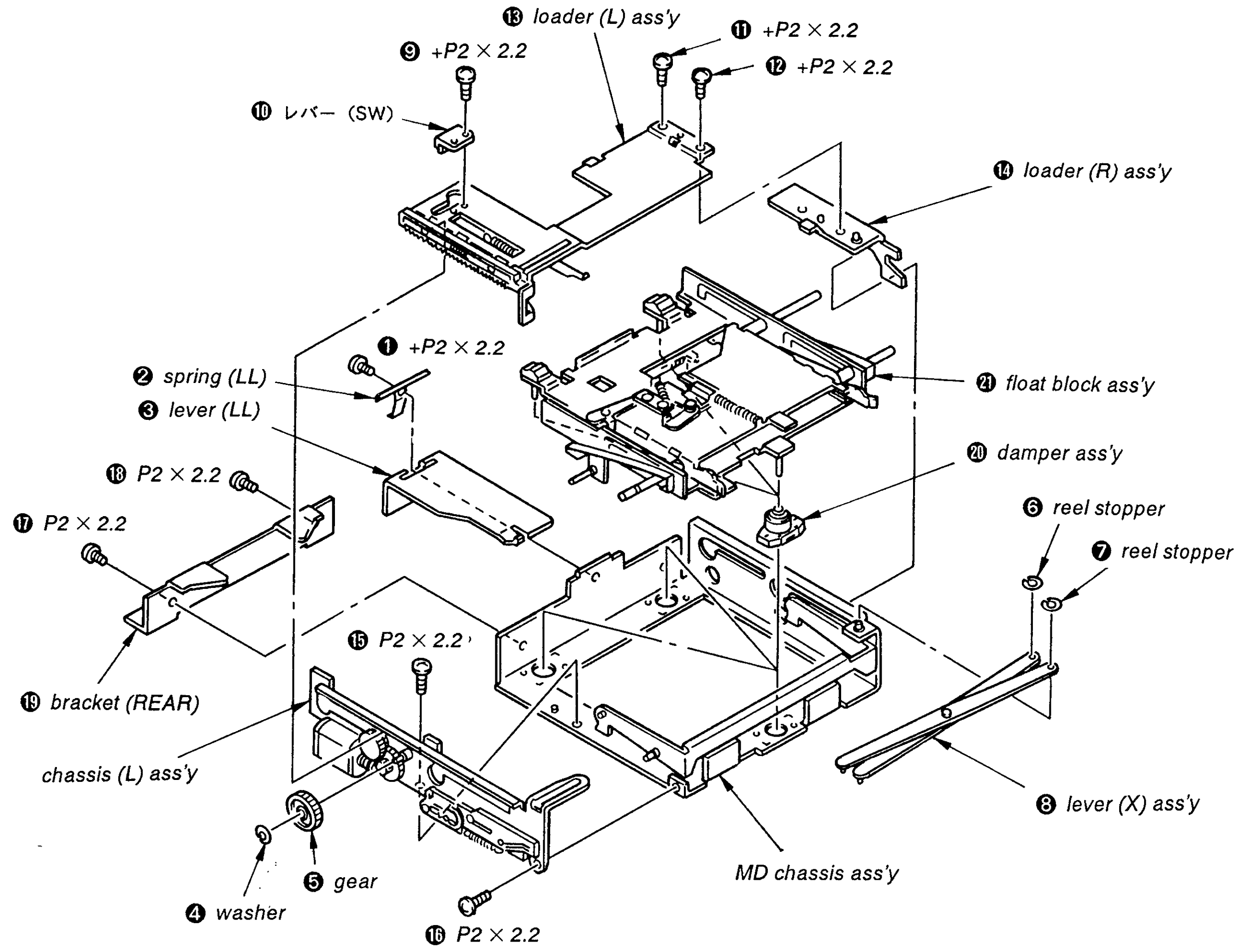

• Chassis (OP) Block Assy

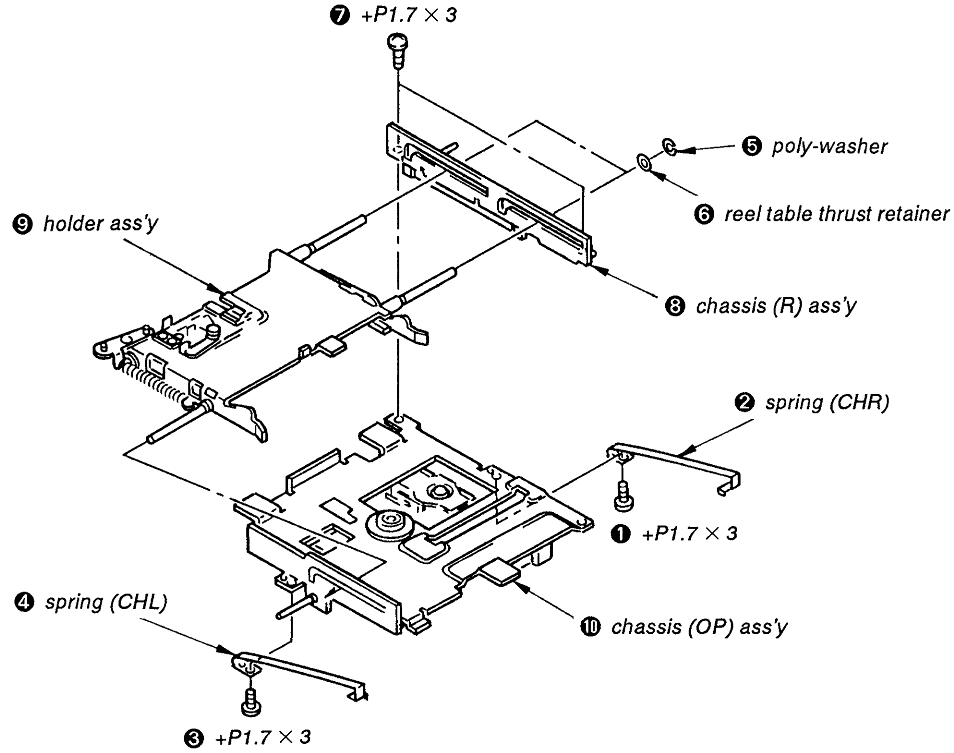

2. **Correction of adjustments**
Page 6 (Supplement-1: 9-957-636-81)

FOCUS/TRACKING GAIN Adjustments

Set both RV542 and RV543 where turned clockwise by 45 degrees, as shown below.

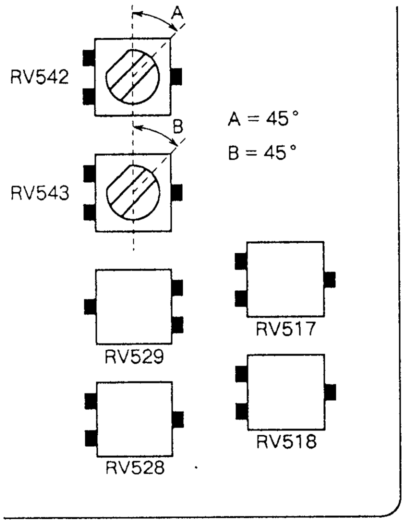

deletion

1. FOCUS GAIN Adjustment

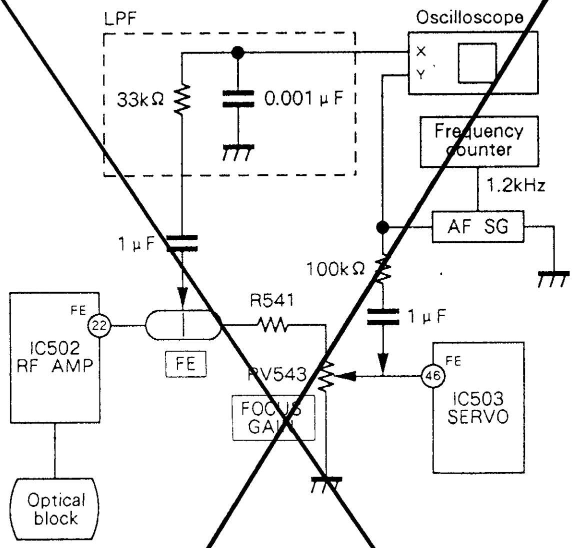

(Waveforms observed on the oscilloscope)

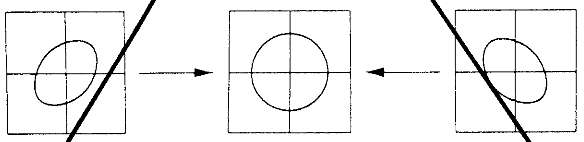

(a) Gain is too low. *(b) Gain is appropriate.* *(a) Gain is too high.*

Play back an MO disk, and then adjust RV543 so that the waveform observed on the oscilloscope is symmetrical to the vertical line at the center, as shown in (b) in the figure.

deletion

2. TRACKING GAIN Adjustment

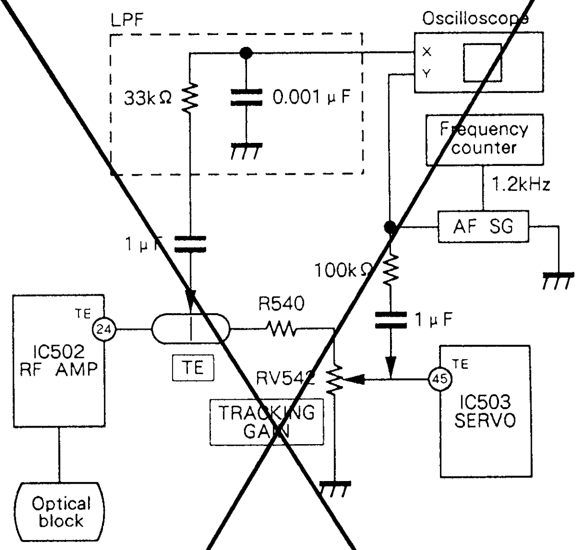

(Waveforms observed on the oscilloscope)

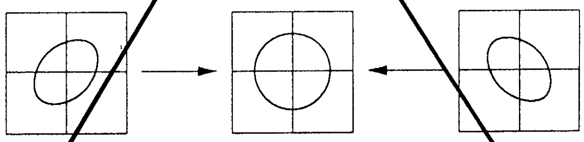

(a) Gain is too low. *(b) Gain is appropriate.* *(a) Gain is too high.*

Play back the MO disk, and then adjust RV542 so that the waveform observed on the oscilloscope is symmetrical to the vertical line at the center, as shown in (b) in the figure.

Page 9 (Supplement-1: 9-957-636-81)

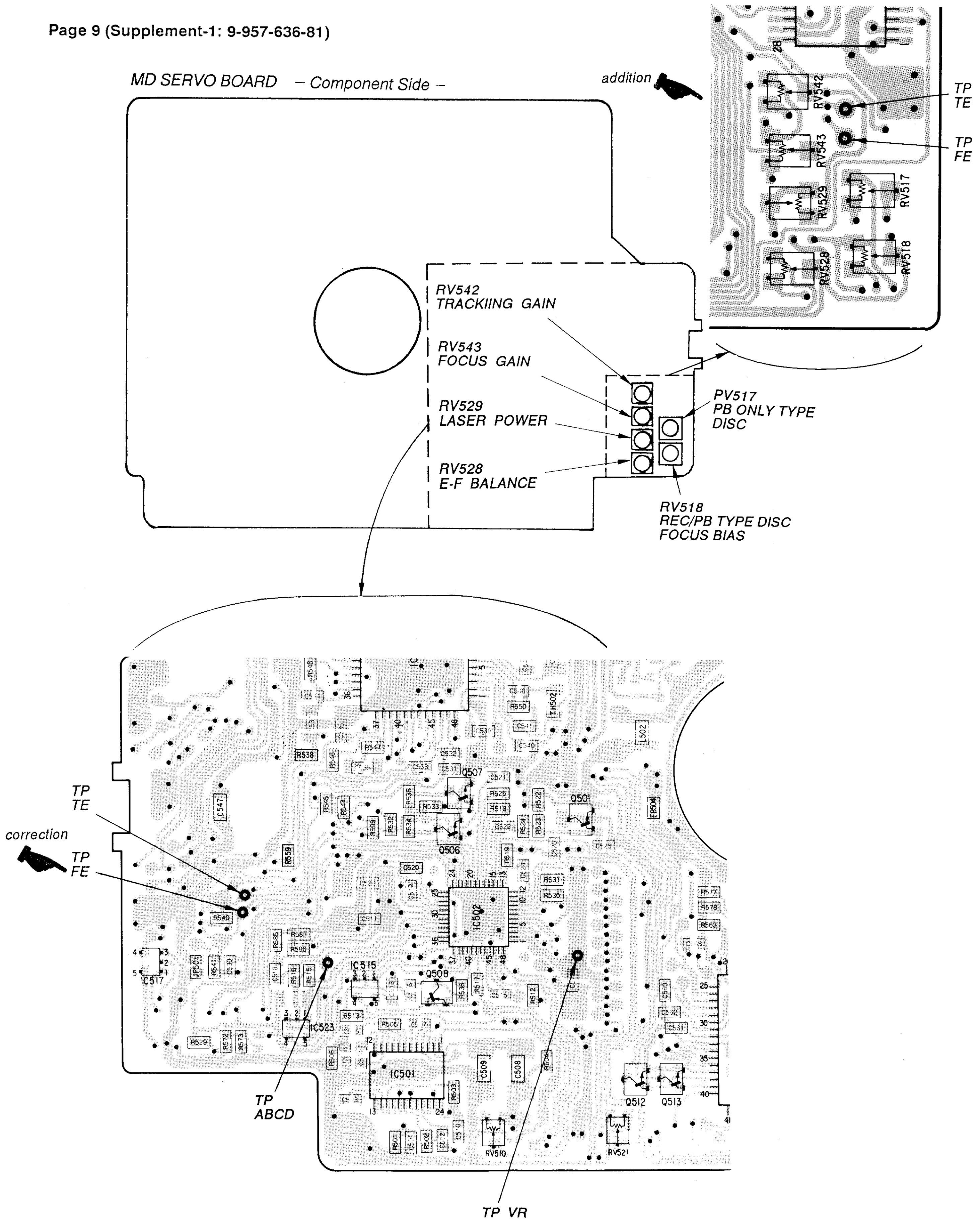

English
93E0576-1
Printed in Japan
© 1993. 5

9-957-636-82

Sony Corporation
Mobile Electronics Group

Published by Audio Sector Quality Assurance Dept.

MDX-U1/U1RDS

SONY®
SERVICE MANUAL

US Model
Canadian Model
E Model
MDX-U1
AEP Model
MDX-U1RDS

SUPPLEMENT-3

File this supplement with the service manual.

Subject:
1. **Revision of Microcomputer IC504 and IC514**
2. **Printed Circuit Boards Modification**

This supplement updates the service manual to include production changed.

TABLE OF CONTENTS

Section	Title	Page
1.	REVISION OF MICROCOMPUTER IC504 AND IC514	2
2.	PRINTED CIRCUIT BOARDS MODIFICATION	3
	Different Parts List	3
	MD Servo Section Printed Wiring Boards	5
	MD Servo Section Schematic Diagram	9
	Main Section Schemaitc Diagram	14
	Main Section Printed Wiring Boards	19

English
93I0577-1
Printed in Japan

© 1993. 9

9-957-636-83

Sony Corporation
Mobile Electronics Group

Published by Audio Sector Quality Assurance Dept.

1. REVISION OF MICROCOMPUTER IC504 AND IC514

IC504 and IC514 has been changed as spare parts for repair.
Please note that there are two different type of IC514.
Be sure to use right one when it's changed.

- **New spare parts**

Board Name	Ref. No.	Part No.	Description	Remarks
Main	IC504	8-759-176-08	IC μPD75518GF-108-3B9	
MD servo	IC514	8-759-173-76	IC μPD78136GF-030-3B9	Not substitute
		8-759-178-11	IC μPD78136GF-031-3B9	

- **Change notice for IC514 (Mechanism control microcomputer)**

The sets is used three different type of IC514.
Be sure to use right one with the following chart when it's changed.

The type of microcomputer for mass-production	The type of microcomputer for repair		Treatment		
	Part No.	Description		Part No.	Description
μPD78138	8-759-173-76	μPD78136GF-030-3B9	R546 470kΩ →	1-216-849-11	METAL CHIP 220kΩ 5% 1/16W
			R547 120kΩ →	1-216-843-11	METAL CHIP 68kΩ 5% 1/16W
μPD78136GF-030-3B9	8-759-173-76	μPD78136GF-030-3B9			
μPD78136GF-031-3B9	8-759-178-11	μPD78136GF-031-3B9			

- **R546, R547 Location**

[MD SERVO BOARD]

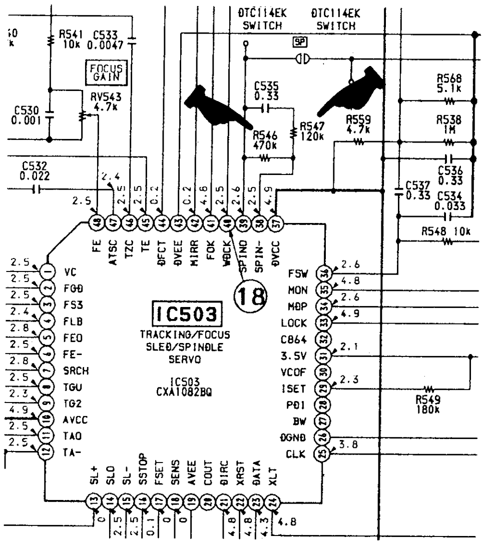

[MD SERVO BOARD] (CONDUCTOR SIDE)

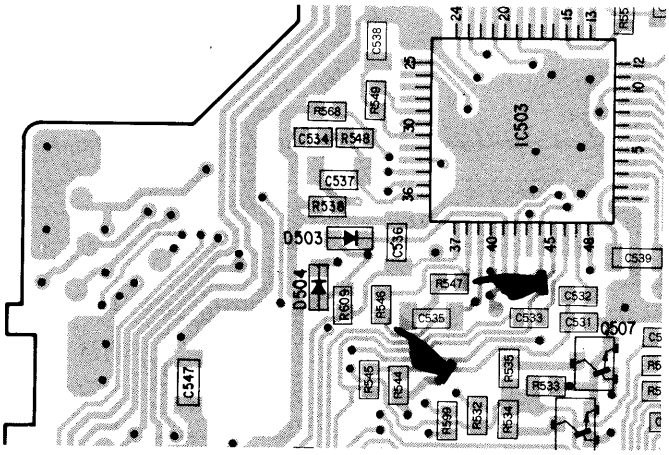

2. PRINTED CIRCUIT BOARDS MODIFICATION
Different Parts List

Ref. No.	FORMER Part No.	FORMER Description	NEW Part No.	NEW Description
		MD SERVO BOARD **************		MD SERVO BOARD **************
C517	1-135-191-21	TANTAL. CHIP 0.47μF 10% 20V	1-135-177-21	TANTAL. CHIP 1μF 10% 25V
C542	1-135-155-21	TANTAL. CHIP 4.7μF 10% 16V	1-135-216-21	TANTAL. CHIP 10μF 10% 10V
C545	1-135-216-11	TANTAL. CHIP 10μF 20% 10V	1-135-518-11	ELECT CHIP 10μF 20% 10V
D503		—	8-719-988-62	DIODE 1SS355
D504		—	8-719-988-62	DIODE 1SS355
IC506	8-759-057-47	IC MS514400L-80VC	8-752-360-59	IC CXK414400TM-12U
IC514	—	IC μPD78138	8-759-178-11	IC μPD78136GF-031-3B9
Q514		—	8-729-900-53	TRANSISTOR DTC114EK
R516	1-216-827-11	METAL CHIP 3.3K 5% 1/16W	1-216-819-11	METAL CHIP 680 5% 1/16W
R559	1-218-708-11	METAL CHIP 4.7K 0.50% 1/16W	1-216-829-11	METAL CHIP 4.7K 5% 1/16W
R568	1-218-272-11	METAL CHIP 5.1K 0.50% 1/16W	1-216-830-11	METAL CHIP 5.6K 5% 1/16W
R606		—	1-216-829-11	METAL CHIP 4.7K 5% 1/16W
R607		—	1-216-829-11	METAL CHIP 4.7K 5% 1/16W
R608		—	1-216-821-11	METAL CHIP 1K 5% 1/16W
R609		—	1-216-827-11	METAL CHIP 3.3K 5% 1/16W
		MAIN BOARD **********		MAIN BOARD **********
C43	1-163-195-00	CERAMIC CHIP 390PF 5% 50V	1-163-131-00	CERAMIC CHIP 390PF 5% 50V
C110		—	1-163-038-00	CERAMIC CHIP 0.1μF 25V
C210		—	1-163-038-00	CERAMIC CHIP 0.1μF 25V
C903	1-164-232-11	CERAMIC CHIP 0.01PF 50V	1-163-037-11	CERAMIC CHIP 0.022μF 10% 25V
D593		—	8-719-210-33	DIODE EC10DS2
IC504	8-759-166-46	IC μPD75518GF-090-3B9	8-759-176-08	IC μPD75518GF-108-3B9
IC992	8-759-078-45	IC NJM78L09UA	8-759-168-19	IC TA78L09F-TE121
R99	1-249-429-11	CARBON 10K 5% 1/4W (US, CND, E)	1-216-073-00	METAL CHIP 10K 5% 1/10W (US, CND, E)
R99	1-249-437-11	CARBON 47K 5% 1/4W (AEP, G)	1-216-089-00	METAL CHIP 47K 5% 1/10W (AEP, G)
R229	1-249-429-11	CARBON 10K 5% 1/4W	1-216-073-00	METAL CHIP 10K 5% 1/10W
R910	1-216-029-00	METAL CHIP 150 5% 1/10W	1-216-033-00	METAL CHIP 220 5% 1/10W

MD SERVO SECTION PRINTED WIRING BOARDS

MD SERVO SECTION SCHEMATIC DIAGRAM

- **Semiconductor Location**

Ref. No.	Location	Ref. No.	Location
D503	G-24	IC502	H-25
D504	G-24	IC503	E-24
D514	E-25	IC504	I-31
		IC505	F-29
Q501	G-26	IC506	G-14
Q504	D-27	IC507	F-31
Q505	C-27	IC510	D-31
Q506	G-25	IC513	F-20
Q507	G-25	IC514	I-28
Q508	H-25	IC515	H-24
Q512	I-27	IC516	J-31
Q513	I-27	IC517	H-22
		IC519	C-25
IC501	I-24	IC523	I-24

Note on Schematic Diagram:

- All capacitors are in μF unless otherwise noted. pF: μμF 50 WV or less are not indicated except for electrolytics and tantalums.
- All resistors are in Ω and ¼ W or less unless otherwise specified.
- △ : internal component.

Note:	Note:
The components identified by mark ⚠ or dotted line with mark ⚠ are critical for safety. Replace only with part number specified.	Les composants identifiés par une marque ⚠ sont critiques pour la sécurité. Ne les remplacer que par une pièce portant le numéro spécifié.

- ▬▬▬ : B + Line.
- ▬ ▬ ▬ : B − Line.
- Power voltage is dc 14.4 V and fed with regulated dc power supply from BATT and ACC terminals.
- Voltages and waveforms are dc with respect to ground under no-signal (detuned) conditions.
  no mark : MD PB/Common
  ( ) : MD stop
  《 》: FM
  ∗ : Impossible to measure
- Voltages are taken with a VOM (10 MΩ/V).
  Voltage variations may be noted due to normal production tolerances.
- Circled numbers refer to waveforms.
- Signal path.
  ⇨ : MD

Note on Printed Wiring Board:

- o—— : parts extracted from the component side.
- ● : Through hole.
- ░░ : Pattern of the rear side.
- ░░ : Pattern from the side which enables seeing.

(The other layers' patterns are not indicated.)

Caution:

Caution:	
Pattern face side: (Conductor Side)	Parts on the pattern face side seen from the pattern face are indicated.
Parts face side: (Component Side)	Parts on the parts face side seen from the parts face are indicated.

MAIN SECTION SCHEMATIC DIAGRAM

*DESTINATION

	JR601	JR602	JR603	JR604	JR606	JR607	JR608	JR609	JR610	JR611	R603	R604	R605	R606	SW601
MDX-U1 (US) (CND)	O	O	O	O	O	O	O	O	O	O	X	X	X	X	X
MDX-U1RDS (AEP)	X	X	X	X	X	X	X	X	X	X	O	O	O	O	X
MDX-U1RDS (G)	X	X	X	X	X	X	X	X	X	X	O	O	O	O	X
MDX-U1 (E)	X	O	O	X	O	O	O	O	O	O	O	X	X	O	O

	Q602	Q601	R574	C55 C56	R50 R51	R70 R80	R99	R128 R228	IC602	TU10	C585 C586	C54
MDX-U1 (US) (CND)	X	X	O	0.027	82K	62K	10K	1.2K	X24C041	1-693-045-11	47P	0.01
MDX-U1RDS (AEP)	O	O	X	0.018	82K	56K	47K	820	X24C161	1-693-046-11	47P	0.0082
MDX-U1RDS (G)	O	O	X	0.018	100K	47K	47K	680	X24C161	1-693-046-11	47P	0.0082
MDX-U1 (E)	X	X	O	0.018	82K	56K	10K	820	X24C041	1-693-045-11	100P	0.01

- Signal path.
  - ⇨ : FM
  - ⇨ : MD
- Voltages and waveforms are dc with respect to ground under no-signal (detuned) conditions.
  - no mark : FM/Common
  - (   ) : MD stop
  - 《   》: MD PB
  - [   ] : AM

- **See page 9 for other notes.**

MAIN SECTION PRINTED WIRING BOARDS

• **Semiconductor Location**

Ref. No.	Location	Ref. No.	Location
D1	E-26	IC601	I-8
D2	E-2	IC602	I-7
D4	I-28	IC901	E-11
D7	G-24	IC902	G-10
D8	H-1	IC904	D-18
D101	E-21	IC905	B-18
D201	H-20	IC991	D-18
D301	E-20	IC992	C-19
D302	H-22		
D501	D-13	Q1	F-3
D502	D-17	Q2	F-4
D503	B-17	Q3	I-1
D504	C-16	Q5	E-4
D505	G-13	Q6	G-28
D506	H-10	Q8	F-26
D507	H-11	Q9	G-26
D508	I-19	Q10	F-5
D509	I-13	Q11	F-4
D510	E-16	Q12	G-24
D511	C-17	Q13	E-4
D512	E-8	Q21	H-23
D513	C-17	Q101	D-24
D514	C-1	Q102	D-23
D515	E-12	Q103	G-23
D516	B-26	Q104	G-20
D517	C-27	Q201	D-22
D518	H-20	Q202	D-23
D519	K-16	Q203	F-23
D520	B-17	Q204	F-20
D521	C-16	Q301	E-9
D522	K-3	Q302	E-10
D523	K-20	Q303	J-18
D524	K-20	Q304	H-21
D255	J-20	Q305	H-21
D526	K-19	Q501	D-18
D527	K-19	Q502	D-18
D528	K-17	Q503	C-13
D529	K-18	Q504	C-12
D530	K-17	Q506	G-14
D531	K-17	Q508	H-19
D532	K-12	Q509	I-19
D533	J-12	Q511	H-10
D534	K-16	Q512	H-10
D535	G-17	Q513	F-13
D536	C-26	Q514	H-11
D537	C-26	Q515	H-11
D538	E-12	Q516	D-17
D539	K-11	Q517	D-8
D540	K-11	Q518	C-16
D551	K-20	Q520	E-9
D593	B-4	Q521	D-9
D601	J-9	Q522	D-16
D602	F-4	Q523	C-12
D905	D-19	Q524	E-17
		Q525	F-17
IC10	E-3	Q526	B-25
IC20	G-3	Q528	I-15
IC40	H-4	Q529	C-25
IC101	E-6	Q530	I-10
IC102	G-22	Q531	I-10
IC103	F-23	Q532	J-10
IC104	G-9	Q533	J-9
IC201	E-7	Q534	J-12
IC202	G-22	Q535	J-12
IC203	F-21	Q536	K-12
IC204	F-9	Q537	K-13
IC301	F-7	Q904	B-19
IC302	H-7	Q905	D-20
IC303	H-21	Q906	D-20
IC501	H-10	Q907	E-17
IC502	K-16	Q991	D-9
IC503	E-19	Q992	F-20
IC504	I-11		